Published: 11-May-2015

Seating -

Torque Specifications

Description	Nm	lb-ft
Seat belt lower anchorage to seat Torx bolt	40	30
Front seat belt buckle to front seat Torx bolt	40	30
Front seat Torx bolts	40	30
Front seat armrest Torx bolt	10	7
Front seat grab handle Torx bolts	25	18
Front seat height adjustment motor nuts	25	18
Front seat position sensor nuts	4	3
Front seat tilt motor Torx bolts	10	7
Front seat backrest assembly Torx bolts	25	18
Front seat recliner motor Torx bolt	10	7
Seat module bracket Torx bolts	10	7
Front seat track motor nuts	25	18
Front seat base nuts	25	18
Front seat cushion Torx bolts	25	18
Third row seat Torx bolts	40	30
Third row seat cushion frame Allen bolts	25	18
Loadspace compartment anchor bolts	25	18
Rear seat Torx bolts	40	30
Rear seat backrest assembly Torx bolts	45	33

mcx30.com

Published: 14-Sep-2015

Seating - Seats

Description and Operation

Component Location

- NOTE: RH drive shown, LH drive similar

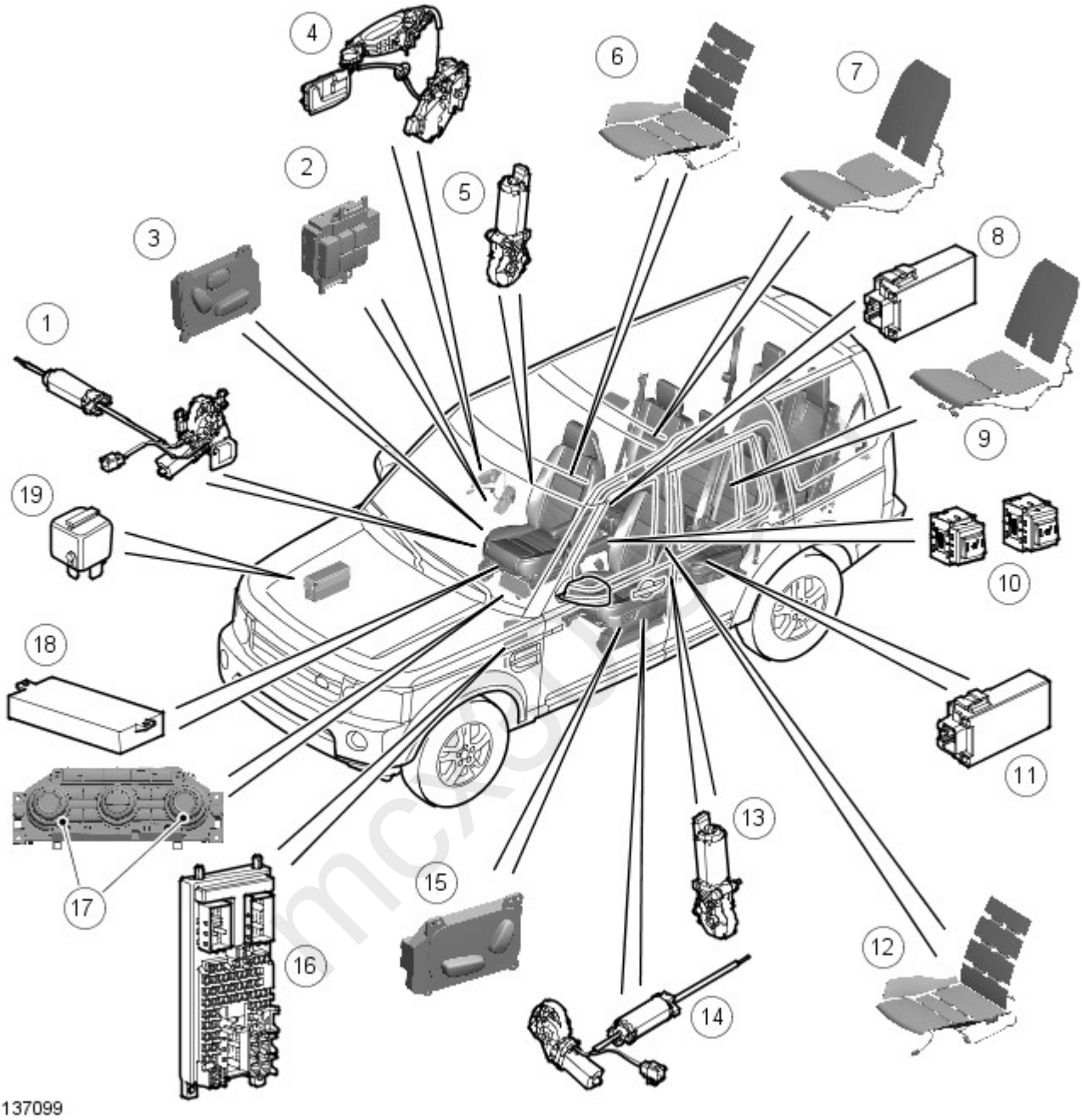

Item	Part Number	Description
1	-	Driver's seat cushion adjustment motor assembly
2	-	Driver's seat memory switch pack
3	-	Driver's seat non-memory switch pack
4	-	Driver's door ajar switch
5	-	Driver's seat squab motor
6	-	Driver's seat heating element
7	-	Second row RH (right-hand) seat heating element
8	-	Second row RH seat heating module
9	-	Second row LH (left-hand) seat heating element
10	-	Second row heated seat switches (vehicles without rear air conditioning)
11	-	Second row LH seat heating module
12	-	Front passenger seat heating element
13	-	Front passenger seat squab motor
14	-	Front passenger seat cushion adjustment motor assembly
15	-	Front passenger seat switch pack
16	-	CJB (central junction box)

17	-	Front heated seat switch pack (climate control system)
18	-	Memory control module
19	-	Front passenger seat power relay

OVERVIEW

Seat Configuration

E138147

Discovery is available in a 5 or 7 seat configuration. The driver's seat has the option of an 8-way power adjustment, with or without memory functionality, or a 6-way manual adjustment. The front passenger seat has the option of a 6 way power

adjustment or a 4-way, non-height, manual adjustment. On vehicles from 2008MY, the front passenger seat can be fitted with an 8-way power adjustment.

The type of second row seats depends upon whether the 7-seat option is fitted. If the vehicle supports 5 seats, the 2nd row is designed as a 60/40 split, flip and fold configuration, whereas a vehicle that supports the 7 seat option is designed as a 35/30/35 split with the 2 outer seats having the ability to 'jack-knife', allowing access to the 3rd row of seats.

All seats are available in a fabric, duragrain or leather finish depending on model specification.

MANUAL FRONT SEATS

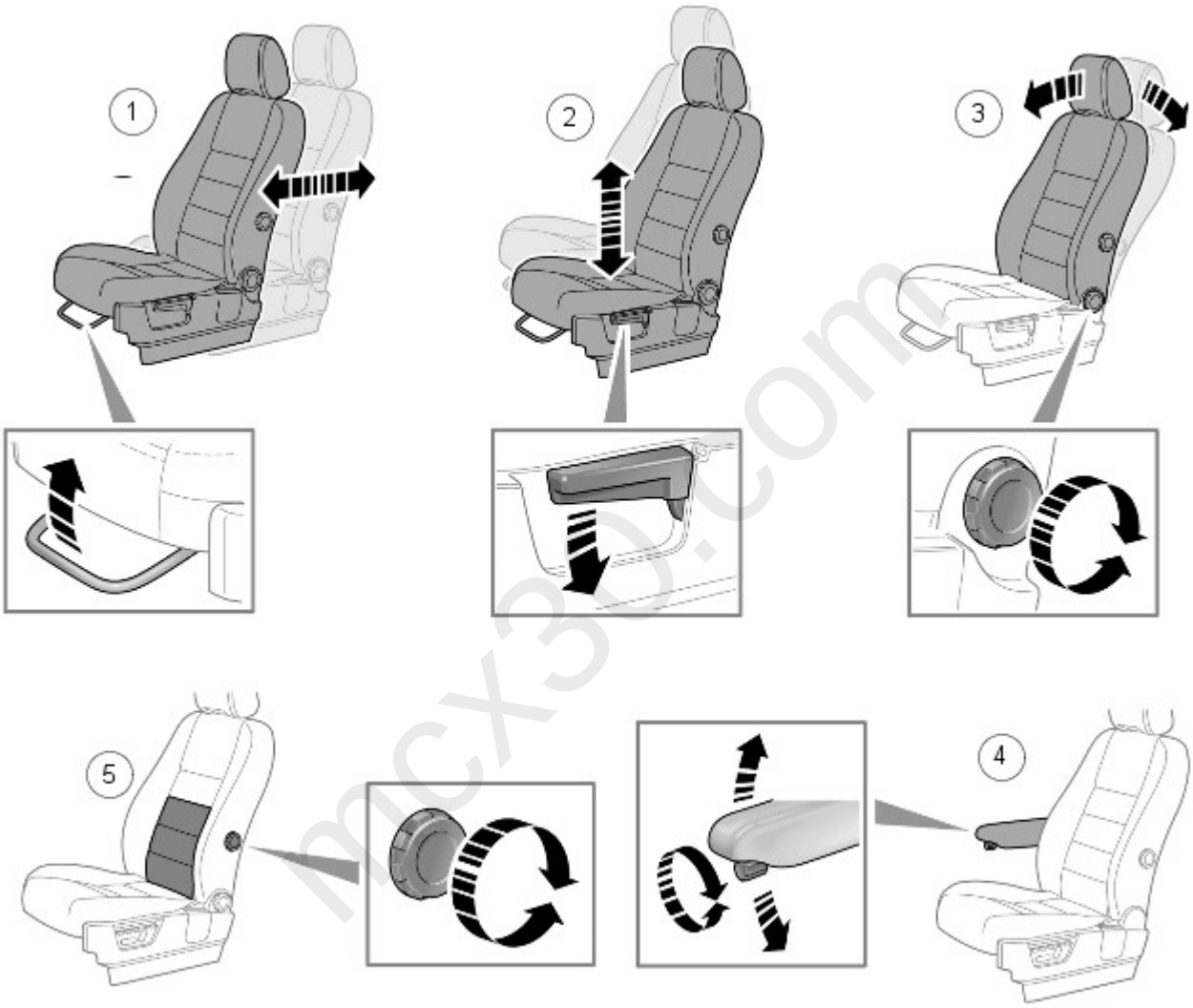

E137621

Item	Part Number	Description
1	-	Fore and aft adjustment
2	-	Height adjustment
3	-	Backrest adjustment
4	-	Lumber support adjustment
5	-	Armrest height adjustment

Height adjustment (driver's seat only)

Pumping the handle controls seat height. Pumping the lever upwards raises the seat; downwards lowers the seat.

Recline adjustment

The angle of the backrest is adjusted by turning the rotary wheel either clockwise or anticlockwise.

Forward / backward adjustment

Lifting the tomel bar at the front of the seat and sliding the seat to the desired position achieves the forwards/backwards adjustment.

Lumber support adjustment

A hand wheel in the side of the seat provides for adjustment of lumbar support.

Folding armrest adjustment (if fitted)

Some vehicles are fitted with adjustable front seat armrests. These are used in the horizontal position or can be stowed vertically alongside the seat back rest. The horizontal position can be adjusted for height by turning the knob set into the end of the armrest.

POWER OPERATED FRONT SEATS (NON-MEMORY)

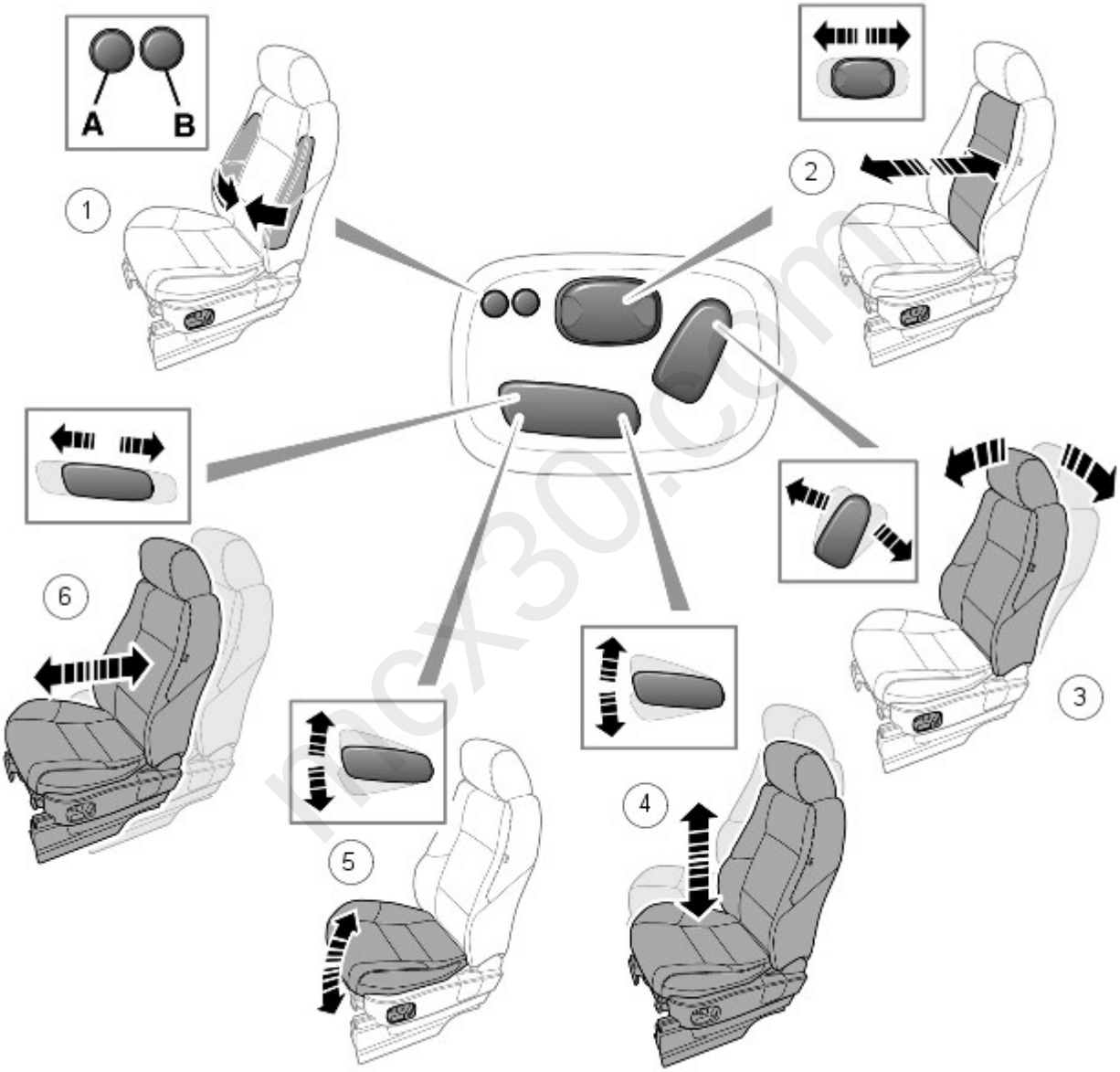

E137620

Item	Part Number	Description
1	-	Bolster adjustment: A - Bolster inflate; B - Bolster deflate
2	-	Lumbar support adjustment
3	-	Backrest adjustment
4	-	Height adjustment
5	-	Cushion tilt adjustment
6	-	Fore and aft adjustment

Forward/Backward adjustment

Push and hold the switch forwards or backwards to move the seat to the desired position.

Seat back adjustment

Twist the switch forwards or backwards until the desired seat back angle is achieved.

Seat cushion height adjustment

Push the switch up or down to raise or lower the cushion.

Front Seat Motors

E138148

• NOTE: On vehicles from 2008MY, the passenger seat can also be fitted with 8-way electrical adjustment.

The seat motors are a permanent magnet motor type coupled to a rack and pinion assembly. Should the motor seize or stick an internal thermal cut-out switch will trip to remove voltage from the motor. Two pins within each of the seat switch packs control the seat motors. Both pins are normally earthed. Operating the switch applies voltage to one of the pins while the other pin remains earthed. Operating the switch in the opposite direction reverses power and earth to the motor allowing the motor to run in the opposite direction.

DRIVER'S MEMORY SEAT

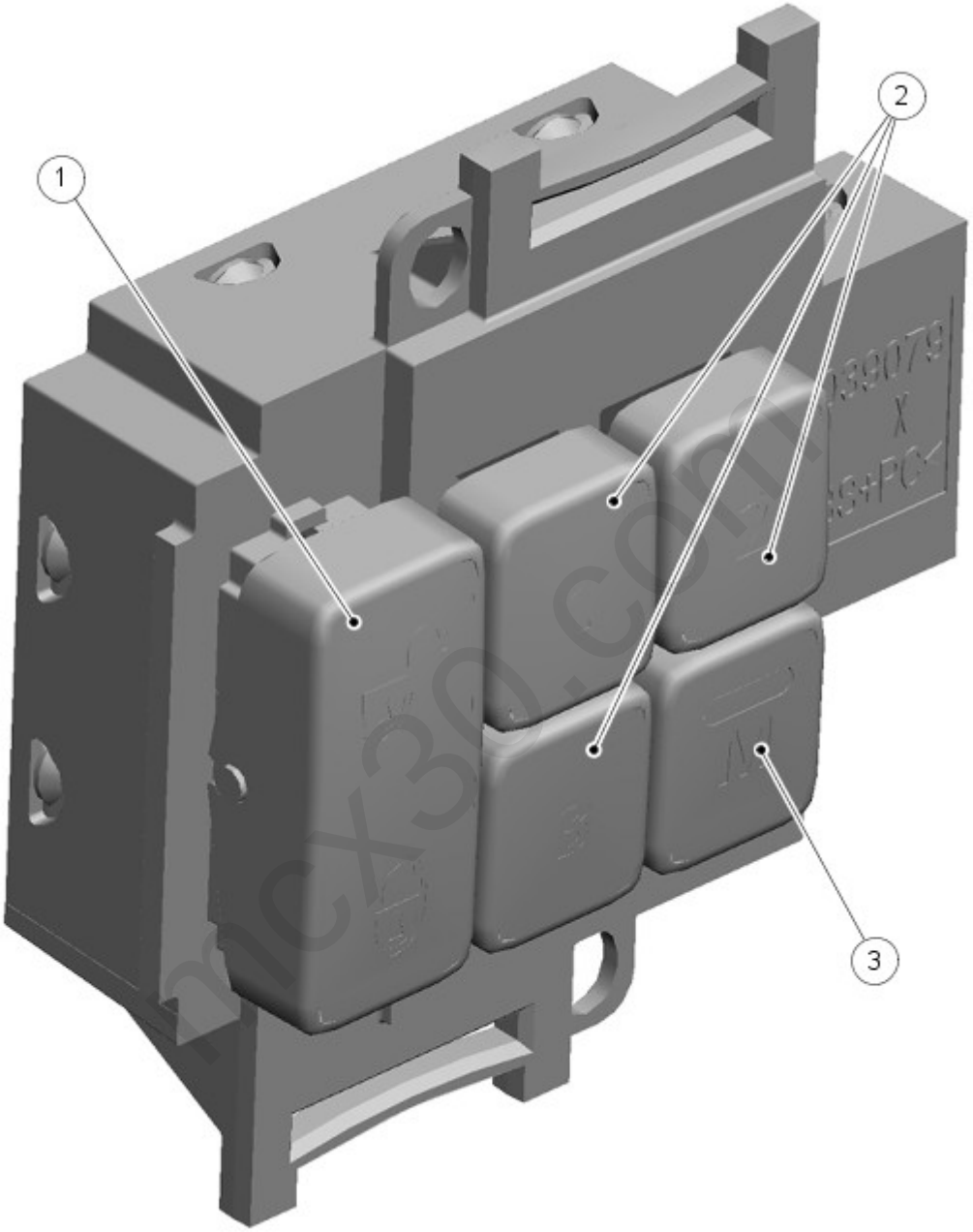

E137100

Item	Part Number	Description
1	-	Lock/unlock button
2	-	Memory preset buttons
3	-	Memory store button

Once the power operated driver's seat, steering column and exterior mirrors are adjusted, the vehicle can memorize these settings for future use.

1. Press the memory store (M) button to activate the memory function. The switch indicator will illuminate.

2. Press one of the preset buttons within 5 seconds to memorize the current settings. MEMORY (1, 2 or 3) SETTINGS SAVED will be displayed on the message center, accompanied by an audible chime to confirm the settings have been memorized.

3. To recall a stored position press the relevant preset button. MEMORY (1, 2 OR 3) RECALLED will be displayed in the message center.

• NOTE: A seat position will only be memorized during the 5 second active period. Any existing settings will be over-written when programming a memory position.

• NOTE: If the driver's seat or steering column are adjusted during entry or exit operation, automatic movement will stop.

Memory Recall

Memory recall has three memory positions stored for the seats, exterior mirrors and electric steering column (where fitted). The switches for this function are located on driver's seat outer side trim panel. Pressing the appropriate numbered memory switch allows the seat to start moving to the position appropriate to that memory.

When a memory recall is initiated, to limit the overall current consumption, only two-seat axis will move towards their intended position at any one time. To minimize current load as the motors start, the initiation of each axis is phased with a 10ms delay between each motor starting.

The following procedure will store a memory position:

- Ensure reverse gear is not engaged
- Manually adjust the seat to the desired position, using the seat switches
- Press and release the 'memory store' switch
- Press and release the desired numbered memory switch within 5 seconds

If any of the seat adjustment or memory switches are activated during a 'one touch' memory recall, the recall will be overridden and the seat will begin to move in the direction corresponding to the switch that has been pressed.

Both mirrors move simultaneously about the vertical axis first (left/right), and then, once all vertical axis movements are complete, about the horizontal axis (up/down). To minimize the number of mirror motor's required, a method of sharing is implemented, which dictates that all movement about one axis is complete before movement about the other axis commences.

Mirror movement coincides with the following table:

Action	Control Module Pin 14	Control Module Pin 7	Control Module Pin 13	Control Module Pin 8
Driver Mirror Up	Battery	-	-	-
Driver Mirror Down	Ground	-	-	-
Driver Mirror Left	-	Ground	-	-
Driver Mirror Right	-	Battery	-	-
Passenger Mirror Up	-	-	Battery	-
Passenger Mirror Down	-	-	Ground	-
Passenger Mirror Left	-	-	-	Ground
Passenger Mirror Right	-	-	-	Battery

Lazy Entry

Pressing the unlock button on the remote transmitter will initiate a memory recall. This feature is known as 'lazy entry'. If the seat movement, memory switch or the lock button on the remote transmitter is pressed, then the 'lazy entry' feature will stop immediately.

The memory settings are stored within EEPROM (electrically erasable programmable read only memory) of the memory control module each time the ignition switch is cycled from position II to position I. These are the positional values that a lazy entry request uses when the remote unlock button for that particular key is next pressed.

The lazy entry feature can be activated or deactivated via the customer personalization feature of the high line instrument cluster. This provides the driver with the option to enable or disable lazy entry as required.
For additional information, refer to: Information and Message Center (413-08 Information and Message Center, Description and Operation).

Immediate Adjustment

Pressing one of the manual adjustment switches will initiate the corresponding motor for that axis until the switch is released.

Only two seat motors can be driven at any one time. However, due to the sharing of relays, there are certain combinations of motors that cannot be driven together. The following table indicates which axis can and cannot be operated at the same time:

	Recline Up	Recline Down	Tilt Up	Tilt Down	Height Up	Height Down	Slide Forward	Slide Backward
Recline Up	-	No	Yes	Yes	Yes	Yes	Yes	Yes
Recline Down	No	-	Yes	Yes	Yes	Yes	Yes	Yes
Tilt Up	Yes	Yes	-	No	Yes	Yes	No*	No*
Tilt Down	Yes	Yes	No	-	Yes	Yes	No*	No*
Height Up	Yes	Yes	Yes	Yes	-	No	No*	No*
Height Down	Yes	Yes	Yes	Yes	No	-	No*	No*
Slide Forward	Yes	Yes	No*	No*	No*	No*	-	No
Slide Backward	Yes	Yes	No*	No*	No*	No*	No	-

Key

- - = Not applicable
- Yes = Can be activated together
- No = Cannot be activated together (Physically impossible)
- No* = Cannot be activated together (Relay sharing restriction)

If two axis are being driven and a third axis is requested to move, the third switch request is ignored until either of the two axis switches, already active, are released. The third axis movement may only be initiated providing the switch has been released and re-selected.

Seat adjustment can be initiated simultaneously with any mirror movement.

REVERSE GEAR MIRROR POSITION

To give the driver a clear view of the kerbs when reversing, the exterior door mirrors can be dipped when reverse gear is selected. The level of mirror dipping is set to a predetermined amount when the vehicle leaves the factory but has the ability to be customer programmed.

The following procedure will store a reverse gear mirror position:

- Perform a memory recall procedure
- Ensure reverse gear is engaged
- Manually adjust the mirrors to the desired position
- Press and release the 'memory store' switch
- Press and release the desired numbered memory switch
- Reverse gear mirror dip setting will be stored for that particular memory setting.

A single chime will be emitted from the instrument cluster to indicate that the store operation has been successful and 'Mirror Dip Stored' message will be displayed in the message center.

Once this sequence has been completed, the stored mirror position will be the position that the mirrors move to when reverse gear is next selected.

Storing a memory position with reverse gear selected only affects reverse gear mirror positions, the remainder of the memory positions remain unchanged.

To protect against an accidental setting, the mirror position will only be stored if a mirror adjustment has been made since reverse gear was selected. If there is no reverse gear mirror position stored, then a default setting, stored in the memory control module, is adopted.

There are three customer personalization memory settings per key. For each of these settings there are 3 possible reverse gear mirror position stores. This equates to a possible nine reverse gear mirror position settings. personalization memory setting relates to the 3 most recent ignition keys.

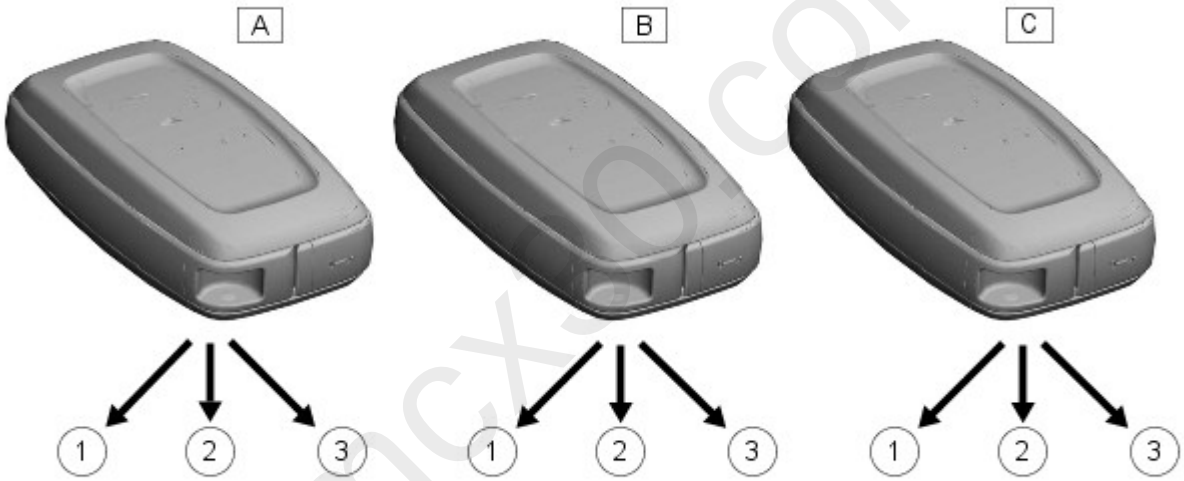

E137622

Item	Part Number	Description
A	-	Most recent ignition key
B	-	Second most recent ignition key
C	-	Third most recent ignition key
1	-	First reverse gear mirror position store
2	-	Second reverse gear mirror position store
3	-	Third reverse gear mirror position store

The reverse gear mirror position feature can be activated or deactivated via the customer personalization feature of the high line instrument cluster. This provides the driver with the option to enable or disable reverse gear mirror position as required.
For additional information, refer to: Information and Message Center (413-08 Information and Message Center, Description and Operation).
Information regarding the reverse gear mirror status, for both manual and automatic transmissions, is transmitted as a message on the LIN (local interconnect network) bus.

When the reverse gear mirror position feature is toggled 'OFF', all 3 memory settings associated with that personalization memory will return to the default reverse gear mirror settings.

• NOTE: Reverse gear status is only available with the ignition in position II.

When reverse gear is de-selected, the mirror position immediately prior to reverse selection will be resumed, unless a memory recall has been requested whilst reverse has been selected, in which case the mirrors will move to the requested memory position when reverse is de-selected.

On vehicles fitted with the ZF automatic transmission there is a delay of 0.5 second following the selection of reverse gear, prior to the reverse mirror position being recalled. This is to prevent any movement of the mirrors as the gear selector is moved through the reverse position on the way to, and from, the park position.

STEERING COLUMN ADJUST (where fitted)

The memory control module controls the electric adjustable steering column in a rake (up and down) and reach (in and out). The steering column can be adjusted for rake and reach by operating the rotary joystick control switch on the LH side of the steering column.

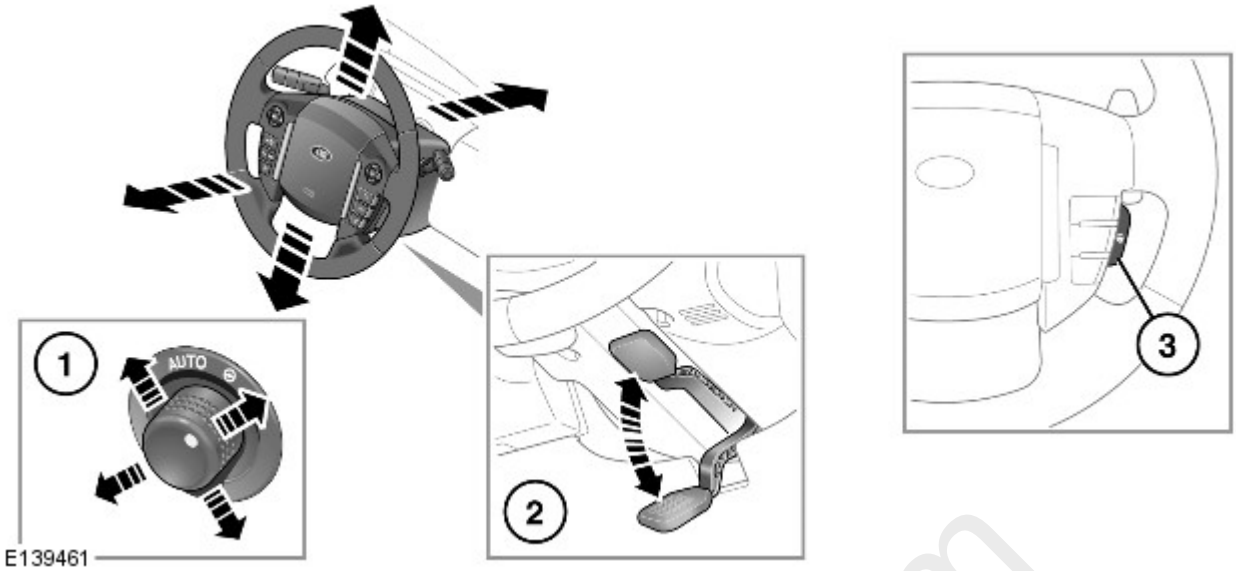

Item	Part Number	Description
1	-	Electric adjustment
2	-	Manual adjustment
3	-	Heated steering wheel

Entry/Exit Mode

Entry/Exit mode provides automatic movement of the steering column and driver's seat to allow easier entry to or exit from the vehicle.

Entry/Exit mode is selected by setting the steering column adjustment switch to the 'AUTO' position.

• NOTE: If the adjustment switch is moved away from 'AUTO' whilst the steering column is tilted away, the steering column will move back to its memorized position. Entry/Exit mode will then be cancelled.

• NOTE: If the adjustment switch is moved during entry/exit operation, steering column movement will stop.

Exit

When the ignition key is removed, the steering column will move to the uppermost rake and innermost reach positions and the driver's seat will move slightly rearwards and lower.

Entry

When the key is inserted in the ignition the steering column and seat will return to their previous positions. If, however, the memorised driver position has been changed (using the seat memory switches or another key transmitter), the steering wheel and seat will move to the new position.

Steering Column Control

Adjustment of the steering column is achieved by a single DC (direct current) motor. Each adjustment movement is transmitted through a solenoid actuated clutch; one clutch for reach movement and one for rake movement.

When engaged, a clutch can be released only if the system is unstressed. As the clutches are mounted on the same motor spindle, the sequence for position adjustment is as follows:

- Engage the selected clutch by powering the appropriate solenoid
- After a time period (approximately 0.1 of a second), the motor is powered in the desired direction
- When the motor reaches the stop position the solenoid and motor is released/unpowered. The clutch remains engaged under stress
- After a time period (approximately 0.1 of a second), the motor is powered in the opposite direction to enable the clutch to disengage when the stress is released.

Motor Rotation Direction	Clockwise	Counter Clockwise
Reach movement	IN	OUT
Rake movement	UP	DOWN

Simultaneous rake and reach movements are not possible since the motor must reverse direction as soon as the first axis has reached its required position.

Steering column rake and reach is controlled via potentiometer feedback.

AUDIBLE AND VISUAL CONFIRMATIONS

mcx30.com

An audible confirmation is generated by the instrument cluster to provide confirmation to the driver that the requested operation has been successfully completed. The following operations support an audible confirmation:

Operation	Audible Confirmation	Conditions
Memory Store	Single Chime	Successful store operation completed
Memory Recall	Double Chime	Only issued if all axis of movement successfully reach the intended position
Reverse Gear Mirror Position Store	Single Chime	Successful store operation for reverse mirror position completed

In addition to audible confirmation there is also a visual confirmation via the instrument cluster message center.
For additional information, refer to: Information and Message Center (413-08 Information and Message Center, Description and Operation).

MEMORY CONTROL MODULE

mcx30.com

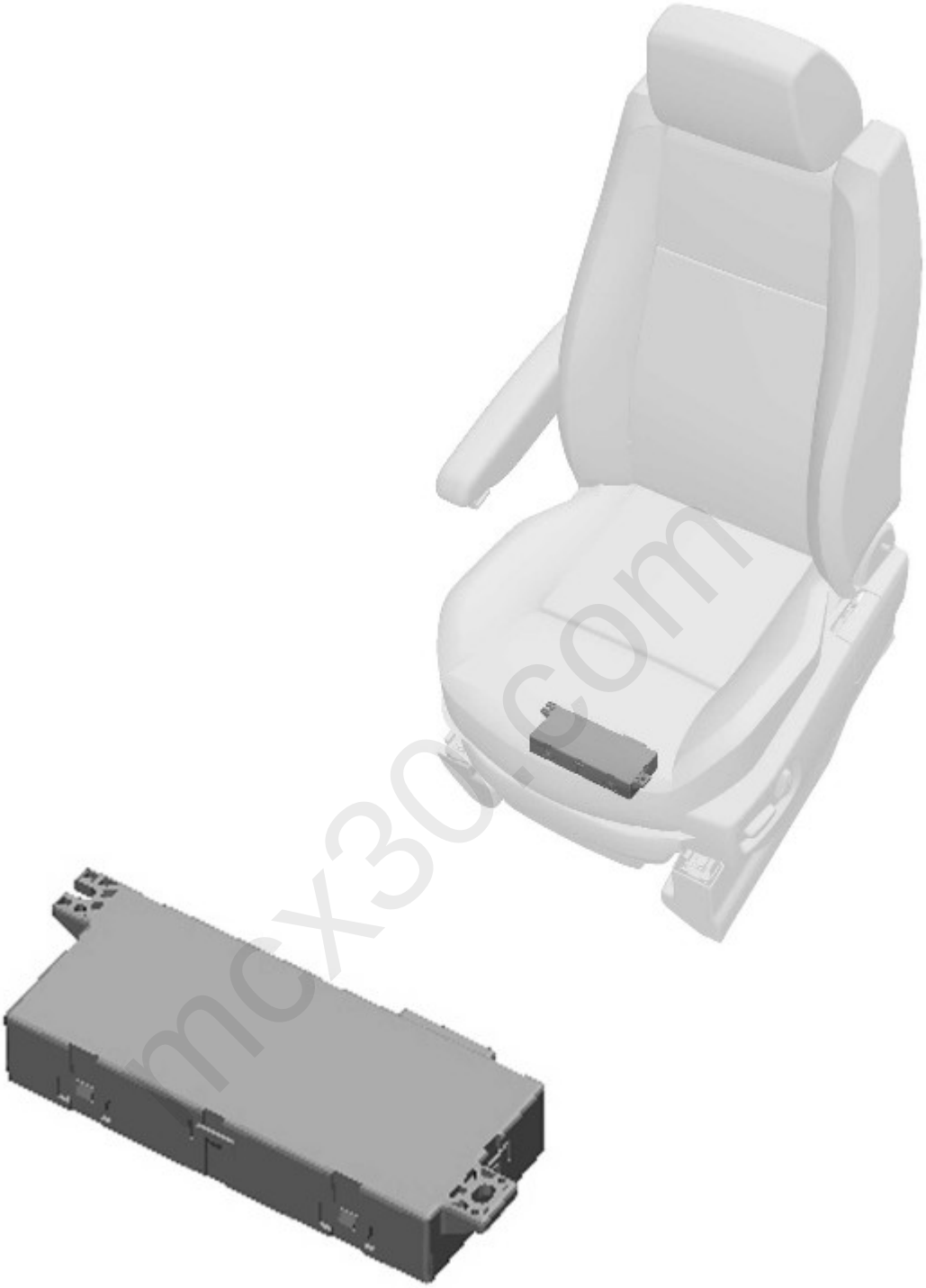

E138149

Memory Control Module Location (LHD shown, RHD similar)

Item	Part Number	Description
1	-	Memory control module

The memory control module, located under the driver's seat, relies upon a number of inputs and controls a number of outputs. As with all electronic control modules, the unit needs information regarding the current operating conditions of the engine and other related systems before it can make calculations, which determine the appropriate outputs.

All memory values are stored in the non-volatile memory, EEPROM. The current motor positions, which are monitored by the control modules integral Hall sensors, are stored in the EEPROM. If a loss of power occurs, upon power reconnection

the current motor position are recalled from memory and adopted as the current positions. This will allow the relative memory positions to be retained without any need to re-calibrate. The memory control module checks the integrity of all data stored in the EEPROM each time it exit's stand-by mode. In the event that the data is corrupt, the control module adopts the default values for all of the programming options. All memory positions are deemed as invalid and the software will perform as if there are no memory positions stored. Memory store operations will reset the relevant memory and allow full functionality.

Stall Detection

Seat, steering column (where fitted) and mirror motors are deemed to have stalled if there is no change in the inputs that are received from the corresponding feedback sensors for 200ms (seat), 1000ms (mirror & steering column) while that axis is being driven.

If a stall condition is detected then the drive to that axis is cancelled for the remainder of that memory operation (memory recall) or until the switch is re-selected (manual movement).

If the motor movement has stopped due to loss of sensor feedback, either stall or sensor failure, then that axis may be activated again, to move past the stall position, by re-selecting the appropriate switch. This allows control of the motor to be maintained if sensor feedback is lost.

Upon re-selection of movement, if sensor pulses are detected then the motor will continue to be driven until the switch is released or another stall condition is detected. If sensor feedback is not detected then the motor is only driven for 0.5 second and then stops until the switch is released and then pressed again, when a further 0.5 second of activation is permitted, and so on.

For all seat motor and steering column manual movements, whenever a motor is driven and a stall occurs, the memory control module records the position at which the stall occurred. If movement occurs beyond a stall position, then that position is erased from the control modules memory. This will always allow movement past a previously recorded stall position once movement has been registered beyond that position. This is the case for both manual and memory movement.

Initialization

When a replacement memory control module is fitted to a seat it should be initialized so that the control module can learn the seats and steering column maximum and minimum adjustment values. This is achieved by:

- adjusting all seat movement axis from one end of travel to the other; slide, recline, height and tilt
- adjusting all steering column movement from one end of travel to the other; rake and reach.

Battery Monitor

If the battery voltage drops below 10.5 Volts, then the memory control module ignores all requests for a memory recall, including lazy entry, or easy entry/exit until the battery voltage has reached 11.5 Volts. This will conserve as much power in the vehicle battery as possible to enable engine cranking.

Stand-by Mode

The memory control module supports a stand-by mode to keep power consumption to a minimum.

The control module will enter stand-by mode upon receipt of a LIN bus 'SLEEP' message from the CJB. Alternatively, a time period of 3 seconds after the LIN bus network has remained quiet provided there are no motors being driven at that time and there are no valid switch requests.

If there is a failure with the LIN bus network then the seat will be operational in 'inch mode' only.

If the control module is being prevented from entering stand-by mode due to motor movement, memory recall or switch operation, then it will enter stand-by mode when the current function has terminated.

• NOTE: In the case of a memory recall, all memory recall operations should be carried out before entering stand-by mode, not just the current motor movement.

The control module will exit stand-by mode if there is any LIN bus activity. When the control module exits stand-by mode it must verify the 'System Enable Status' in order to recognize when it should respond to a switch request.

SEAT HEATING

mcx30.com

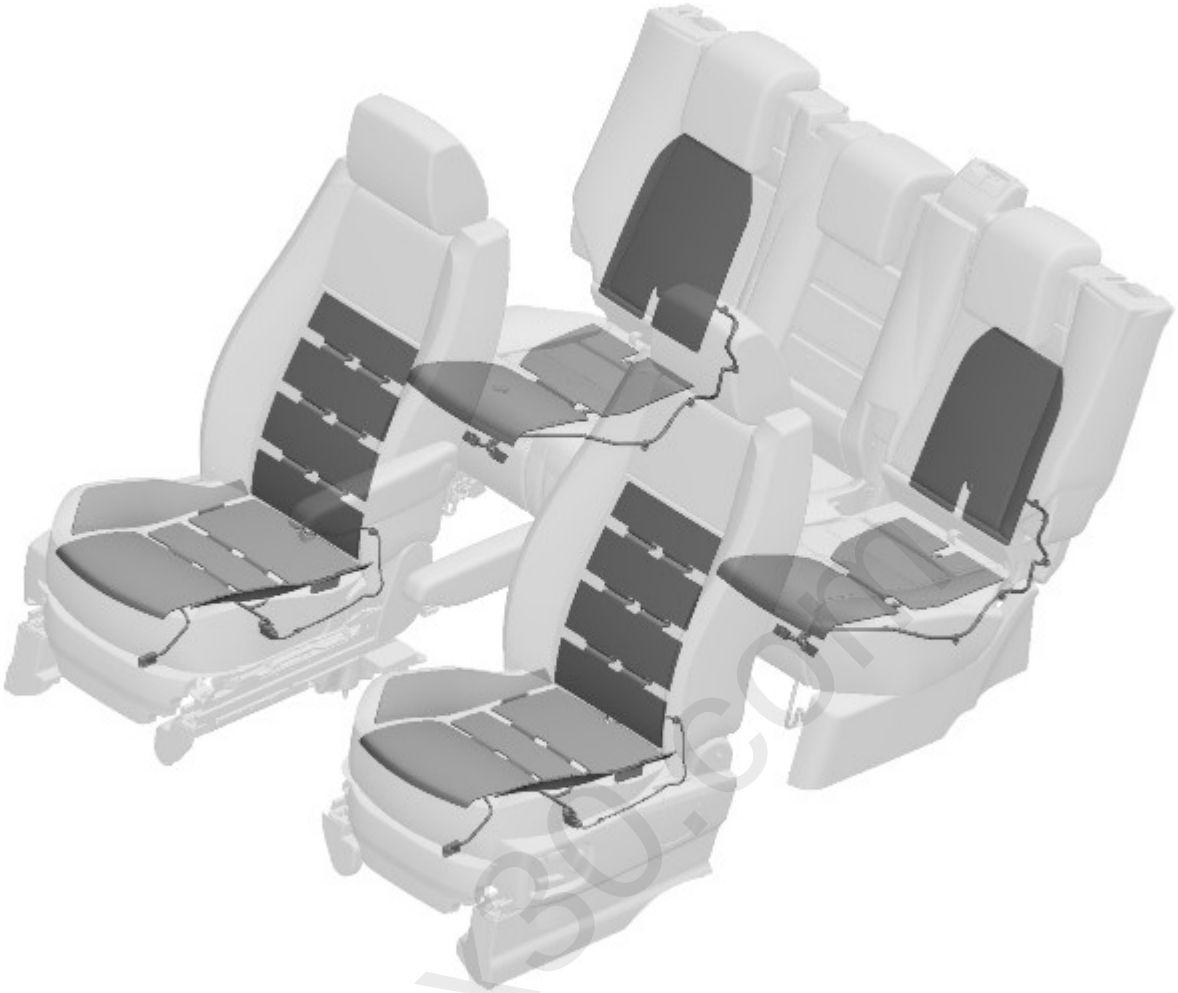

E138150

Front Seats

Front Seat Heater Switches

mcx30.com

E138151

Item	Part Number	Description
1	-	LH front seat heater switch
2	-	RH front seat heater switch

The heated front seat system is available on both manual and electric seats and is controlled by the Automatic Temperature Control Module (ATCM).

When the front seat heater switch is operated, power is supplied to the heater elements in the seat, causing the seat to heat up. The ATCM senses seat temperature via the sensor in the cushion and regulates voltage to the seat heater elements to maintain a constant temperature.
For additional information, refer to: Control Components (412-04 Control Components, Description and Operation).

Rear Seat Heaters

Rear Seat Heater Switches

- NOTE: Rear air conditioning variant shown

mcx30.com

The RH and LH rear seats support three integral heating elements, squab, back rest and bolster. The optional rear child booster seat also supports an integral seat-heating element.

• NOTE: The rear center seat is not available with seat heating.

The rear seat heaters are enabled when the ignition switch is position II, and operate at one of two temperature settings. With the first press of a rear seat heater switch the relative rear seat heat control module (RH or LH) adopts the higher temperature setting, supplies a power feed to the related rear seat heater elements and illuminates two amber LED (light emitting diode)'s in the switch. At the second press of the switch the control module adopts the lower temperature setting and extinguishes one of the LED's. At the third press of the switch the control module de-energizes the heater elements and extinguishes the second LED. The seat heaters remain on until selected off or the ignition is turned off.

The rear seat heat control modules receive an input from a temperature sensor in RH and LH rear seats, and regulate the power feed of the heater elements to control the seat temperature at the appropriate temperature setting between 35 and 45 °C (95 and 113 °F). The actual temperature settings vary with the type of seat covering, to allow for the different heat conduction properties of the different seat covering materials.

DIAGNOSTICS

The exchange of information between the diagnostic unit and the memory control module is via the CJB, which are interconnected via the hi-speed CAN (controller area network) bus and LIN bus. There is a non-volatile memory (EEPROM) for saving detected errors. Its contents are not lost when the power supply is disconnected. Only a Land Rover approved diagnostic system can erase the error memory.

CONTROL DIAGRAM

• NOTE: A = Hardwired; J = CAN bus

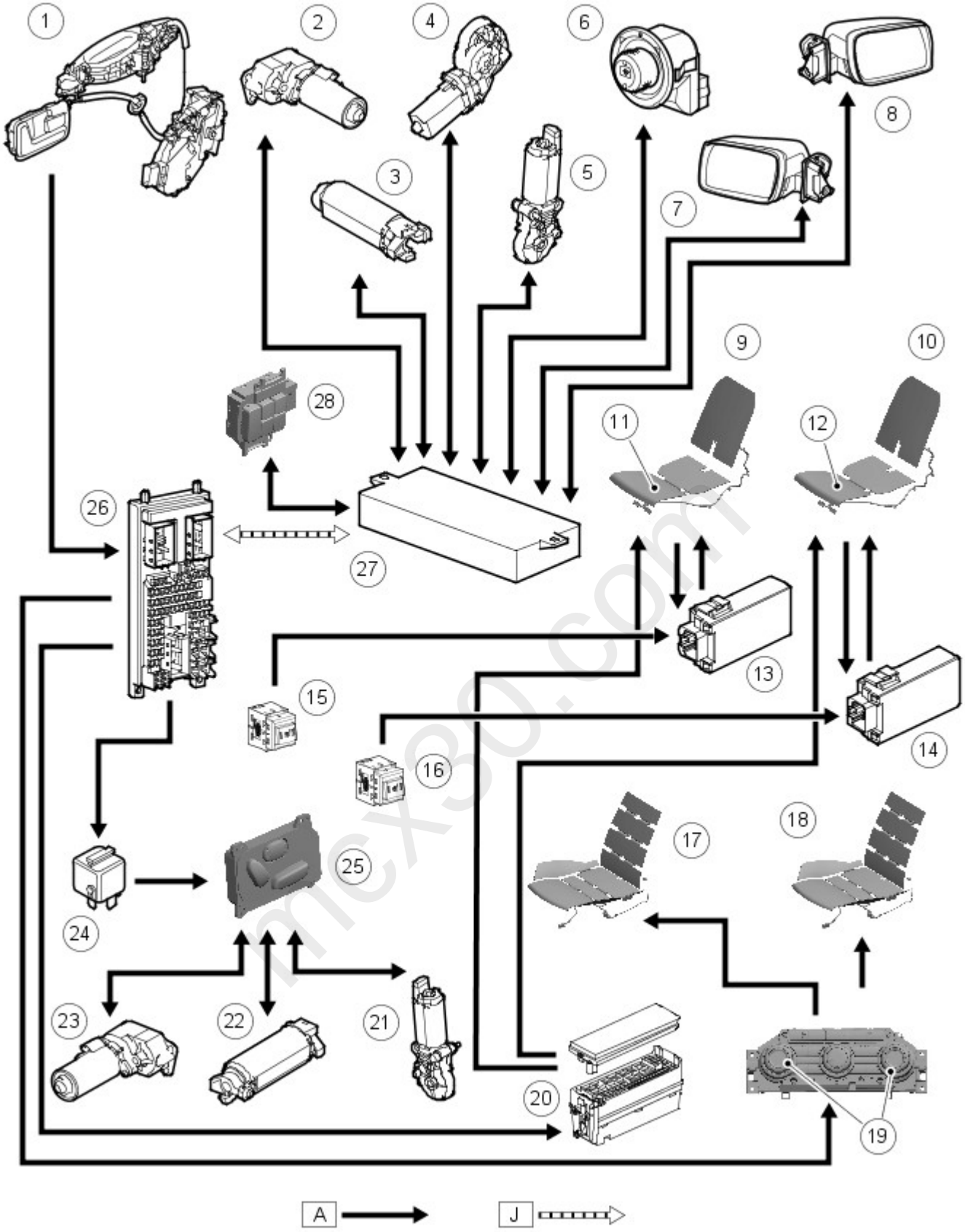

Item	Part Number	Description
1	-	Driver's door ajar switch
2	-	Driver's seat height motor
3	-	Driver's seat slide motor
4	-	Driver's seat tilt motor
5	-	Driver's seat recline motor
6	-	Mirror adjustment switch
7	-	LH mirror motor
8	-	RH mirror motor

9	-	LH rear seat heater
10	-	RH rear seat heater
11	-	LH rear seat heater cut-off switch
12	-	RH rear seat heater cut-off switch
13	-	LH rear seat heater control module
14	-	RH rear seat heater control module
15	-	LH rear seat heater switch
16	-	RH rear seat heater switch
17	-	Driver's seat heater
18	-	Front passenger seat heater
19	-	Front seat heater switches
20	-	BJB (battery junction box)
21	-	Front passenger seat recline motor
22	-	Front passenger seat slide motor
23	-	Front passenger seat height motor
24	-	Front passenger seat power relay
25	-	Front passenger seat switch pack
26	-	CJB
27	-	Memory control module
28	-	Driver's seat memory switch pack

mcx30.com

Published: 11-May-2015

Seating - Seats

Diagnosis and Testing

Principle of Operation

For a detailed description of the seating systems and operation, refer to the relevant Description and Operation section of the workshop manual. REFER to: Seats (501-10 Seating, Description and Operation).

Inspection and Verification

CAUTION: Diagnosis by substitution from a donor vehicle is **NOT** acceptable. Substitution of control modules does not guarantee confirmation of a fault and may also cause additional faults in the vehicle being checked and/or the donor vehicle.

• NOTE: Check and rectify basic faults before beginning diagnostic routines involving pinpoint tests.

1. **1.** Verify the customer concern.
2. **2.** Visually inspect for obvious signs of mechanical or electrical damage.

Visual Inspection

Mechanical	Electrical
• Seat runners • Seat frames • Seat movement switch condition and installation • Seat heater switch condition and installation • Seat motor(s) condition and installation • Steering column switch condition and installation • Steering column condition and installation • Door mirror switch condition and installation • Door mirror condition and installation	• Battery condition and state of charge • Fuses • Harnesses and connectors • Seat movement switch(s) • Seat heater switch(s) • Seat heater elements • Seat motor(s) • Seat module(s) • Memory control module(s) • Steering column switch • Steering column motor • Door mirror switch(s) • Door mirror motor(s) • Ignition switch • Battery Junction Box (BJB) • Central Junction Box (CJB) • Local Interconnect Network (LIN) circuit

3. **3.** If an obvious cause for an observed or reported concern is found, correct the cause (if possible) before proceeding to the next step.
4. **4.** If the cause is not visually evident, verify the symptom and refer to the Symptom Chart, alternatively check for Diagnostic Trouble Codes (DTCs) and refer to the DTC Index.

Symptom Chart

Symptom	Possible Causes	Action
Seat does not move when the switch is operated (forward, backward, tilt, etc)	• Runner or mechanism jammed • Switch fault • Motor fault • Thermal cut-out engaged • Circuit fault • Module fault	Check for obstructions at the seat runners, mechanisms, etc, rectify as necessary. The thermal cut-out may engage if there is a motor or mechanism fault. Check for DTCs indicating a switch, motor or module fault.
Steering column does not move when the switch is operated	• Switch fault • Motor fault • Clutch/Solenoid fault	Check for DTCs indicating a switch, motor or clutch/solenoid fault.
Mirrors do not move when the switch is operated	• Mechanical fault • Switch fault • Motor fault • Circuit fault: high resistance • Circuit fault: short circuit to ground	For mirror tests, refer to the relevant section of the workshop manual.
Memorized seat/steering column/mirror position is not resumed	• Battery voltage below 10.5 volts • Position not stored • Switch operated during "one-touch" memory recall • EEPROM fault	Before condemning a memory component, check the function from the switch and refer to the symptoms above. Make sure the battery voltage is adequate. Make sure that the desired position is correctly stored. Make sure that the memory store/recall procedure is being followed. Refer to the relevant section of the workshop manual.

Symptom	Possible Causes	Action
"Lazy entry" function inoperative	• Remote transmitter fault (battery, transmitter programming, etc) • See list for "position is not resumed"	Check that the remote transmitter operates the central locking, etc. If it does, the fault is not with the transmitter. Refer to "position is not resumed".
Entry/Exit mode inoperative	• Switch not in **AUTO** mode • Switch fault • Motor fault • Clutch/Solenoid fault	Make sure the function is enabled and that the switch is correctly set. Check for DTCs indicating a switch, motor or clutch/solenoid fault.
Seat does not get warm	• Switch fault • Fuses • Circuit fault • Temperature sensor • Battery voltage is greater than 16.5 volts	Check the LEDs at the switches as a quick check of the switch function. If the LEDs illuminate when the switches are operated, there is power to the switches and the switches are operating at least one level. Check the seat heater circuits, refer to the electrical guides. Check the temperature sensor function. If the battery voltage is higher than 16.5 volts for more than 5 seconds, seat heating is suspended. Refer to the relevant section of the workshop manual.
Part(s) of the seat does not get warm	• Element fault	There are up to three elements in each seat, if the rest of the seat operates normally, check the element connections and continuity. Refer to the electrical guides.

DTC Index

For a list of Diagnostic Trouble Codes (DTCs) that could be logged on this vehicle, please refer to Section 100-00.
REFER to: Diagnostic Trouble Code (DTC) Index - DTC: Driver/Passenger Front Seat Module (DSM/PSM) (100-00 General Information, Description and Operation).

mcx30.com

Published: 11-May-2015

Seating - Front Seat Cushion

Removal and Installation

Removal

• NOTE: In this procedure the cushion is removed as an assembly. There is a separate procedure showing removal of the cushion cover.

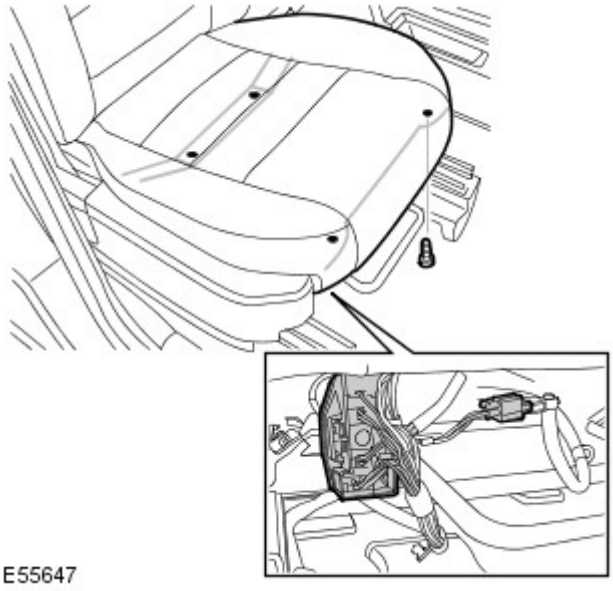

1. Remove the front seat cushion assembly.

- Release and disconnect the 2 electrical connectors.
- Remove the 4 Torx bolts.

Installation

1. Install the front seat cushion assembly.

- Tighten the Torx bolts to 25 Nm (18 lb.ft).
- Connect and secure the electrical connectors.

mcx30.com

Published: 11-May-2015

Seating - Front Seat

Removal and Installation

Removal

- WARNINGS:

It is imperative that before any work is undertaken on the SRS system, the appropriate information is read thoroughly.

Always disconnect both battery cables before beginning work on the SRS system. Disconnect the ground cable first. Never reverse connect the battery.

1. Make the SRS system safe.
For additional information, refer to: Standard Workshop Practices (100-00 General Information, Description and Operation).

2. NOTE: Torx bolts may be re-used.

Release the front seat.

- Remove the bolt covers.
- Remove and the 5 Torx bolts.

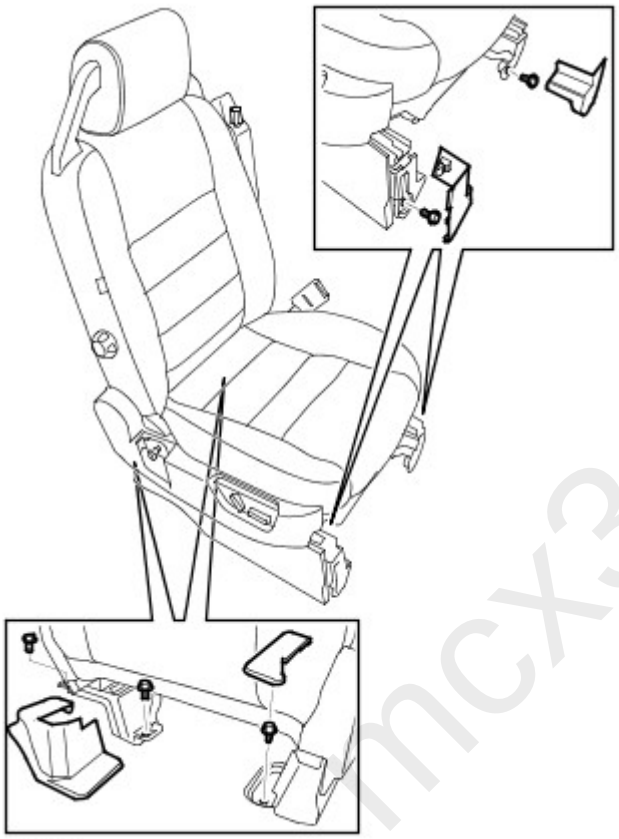

E45101

3. Release the safety belt lower anchor from the seat.

- Remove the bolt cover.
- Passenger side, disconnect the electrical connector.
- Remove and discard the Torx bolt.

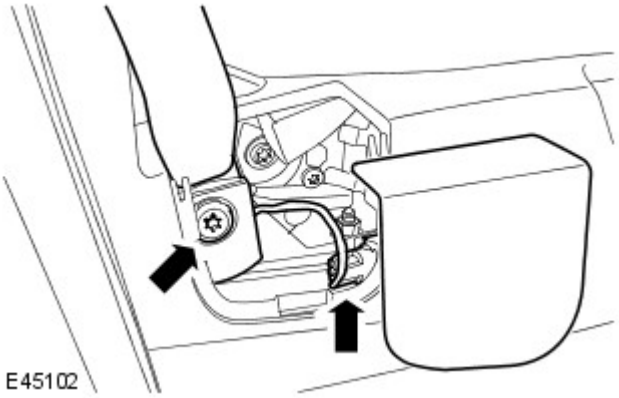

E45102

mcx30.com

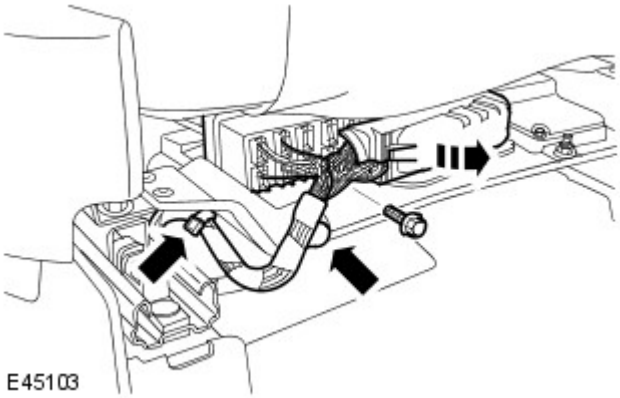

4. With assistance, remove the front seat.

- Protect the rocker panel.
- Remove the bolt.
- Disconnect the 2 electrical connectors.
- Release the 2 wiring harness clips.

Installation

1. With assistance, install the front seat.

- Connect the electrical connectors.
- Secure the wiring harness clips.

2. Attach the safety belt lower anchor to the seat.

- Tighten the new Torx bolt to 40 Nm (30 lb.ft).
- Passenger side, connect the electrical connector.
- Install the bolt cover.

3. Secure the front seat.

- Tighten the Torx bolts to 40 Nm (30 lb.ft).
- Install the bolt covers.

4. Connect the battery ground cable.

mcx30.com

Published: 11-May-2015

Seating - Third Row Seat

Removal and Installation

Removal

- NOTE: Third row seats must be removed as a pair.

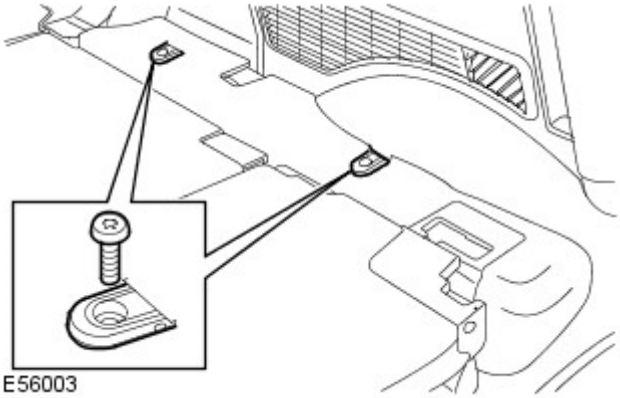

1. Remove the loadspace compartment anchors.

- Remove the 4 Torx bolts.

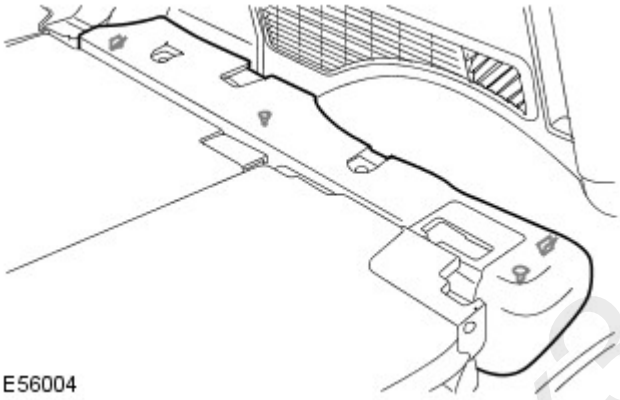

2. Remove the loadspace trim panels.

- Release from the 4 clips.

mcx30.com

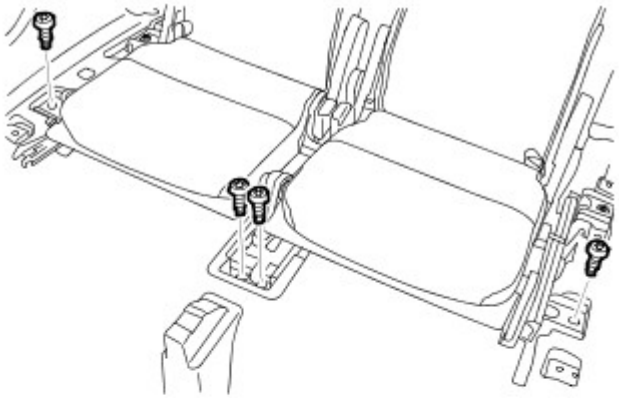

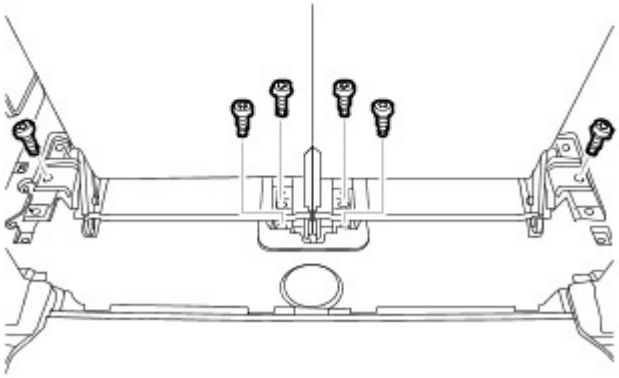

E56005

3. NOTE: Torx bolts may be re-used.

Remove the third row seats.

- Release the trim cover.
- Remove the 10 Torx bolts.

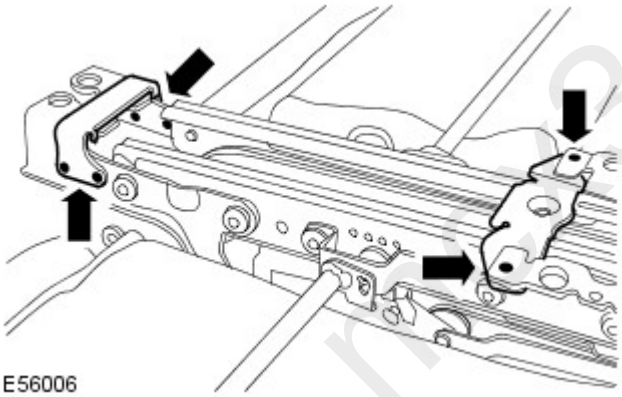

E56006

4. NOTE: Do not disassemble further if the component is removed for access only.

Separate the third row seats.

- Remove the seat frame finisher.
- Drill out the 6 rivets.
- Remove the 2 brackets.

Installation

1. Attach the third row seats.

- Install the brackets.
- Install the rivets.

2. Install the third row seats.

- Tighten the Torx bolts to 40 Nm (30 lb.ft).
- Secure the trim cover.

3. Install the loadspace trim panels.

- Secure in the clips.

4. Install the loadspace compartment anchors.

- Tighten the Torx bolts to 25 Nm (18 lb.ft).

Published: 11-May-2015

Seating - Rear SeatVehicles With: 60/40 Split Seat

Removal and Installation

Removal

- NOTE: This procedure shows the removal and installation of both the LH and the RH seats.

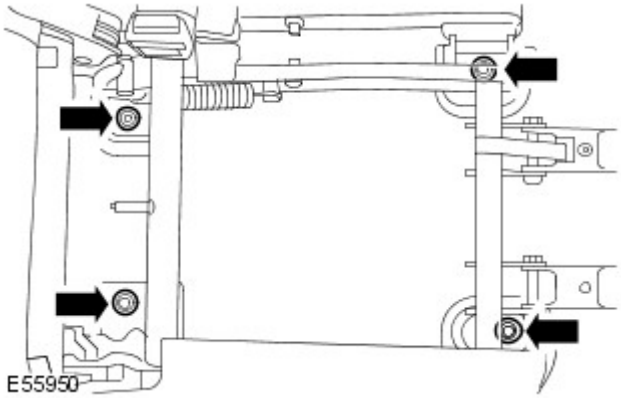

1. NOTE: The Torx bolts can be re-used.

   Release the RH rear seat.

   - Fold the LH seat cushion forward.
   - Remove the 4 Torx bolts.
   - Fold down the rear seat backrest.

2. Remove the RH rear seat.

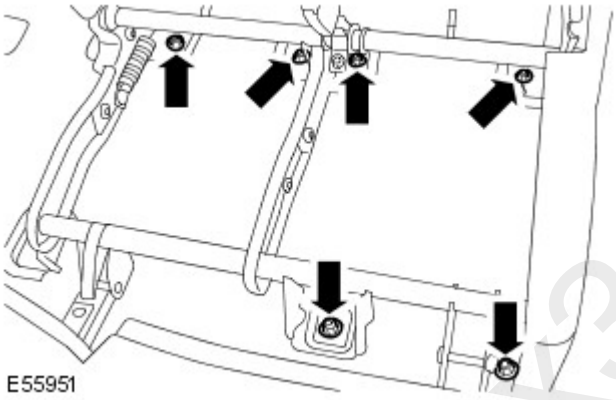

3. NOTE: The Torx bolts can be re-used.

   Release the LH rear seat.

   - Fold the LH seat cushion forward.
   - Remove the 6 Torx bolts.
   - Fold down the rear seat backrest.

4. With assistance, remove the LH rear seat assembly.

Installation

1. With assistance, install the LH rear seat assembly.
   - Position the seat on the dowels.
2. Secure the LH rear seat.
   - Return the seat backrest to the upright position.
   - Tighten the Torx bolts to 40 Nm (30 lb.ft).
   - Fold the seat cushion rearwards.
3. Install the RH rear seat.
   - Position the seat on the dowels.
4. Secure the RH rear seat.
   - Return the seat backrest to the upright position.
   - Tighten the Torx bolts to 40 Nm (30 lb.ft).
   - Fold the seat cushion rearwards.

mcx30.com

Published: 11-May-2015

Seating - Rear SeatVehicles With: 40/20/40 Split Seat

Removal and Installation

Removal

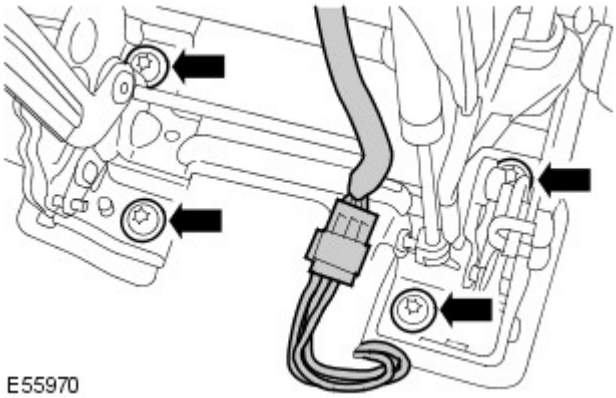

1. NOTE: The Torx bolts can be re-used.

   Release the rear seat.

   - Remove the front 2 Torx bolts.
   - Fold the seat assembly forwards.
   - Disconnect the electrical connector.
   - Remove the rear 2 Torx bolts.

2. Remove the rear seat assembly.

Installation

1. Install the rear seat assembly.
2. Secure the rear seat.
   - Connect the electrical connector.
   - Tighten the rear Torx bolts to 45 Nm (33 lb.ft).
   - Fold seat assembly rearwards.
   - Tighten the front Torx bolts to 45 Nm (33 lb.ft).

mcx30.com

Published: 11-May-2015

Seating - Front Seat Cushion Cover

Removal and Installation

Removal

1. Remove the front seat cushion assembly.
   For additional information, refer to: Front Seat Cushion (501-10 Seating, Removal and Installation).
2. Release the front seat cushion cover.
   - Release the 13 clips.

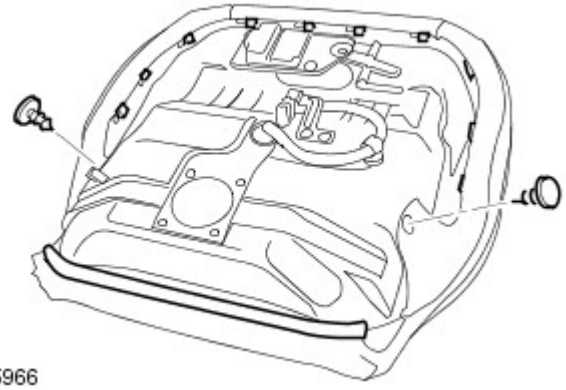

E55966

3. Remove the front seat cushion cover.
   - Remove the 12 hog rings.

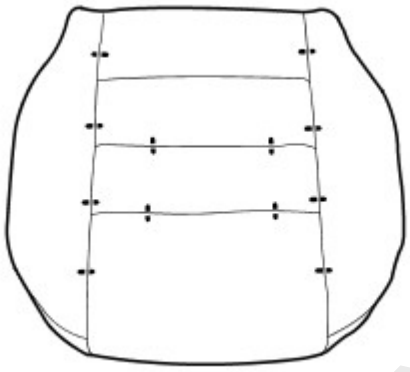

E56020

Installation

1. Install the front seat cushion cover.
   - Install the hog rings.
   - Attach the cover and secure with the clips.
2. Install the front seat cushion assembly.
   For additional information, refer to: Front Seat Cushion (501-10 Seating, Removal and Installation).

mcx30.com

Published: 11-May-2015

Seating - Front Seat Cushion Heater Mat

Removal and Installation

Removal

1. Remove the front seat cushion cover.
   For additional information, refer to: Front Seat Cushion Cover (501-10 Seating, Removal and Installation).
2. Remove the front seat cushion heater mat.

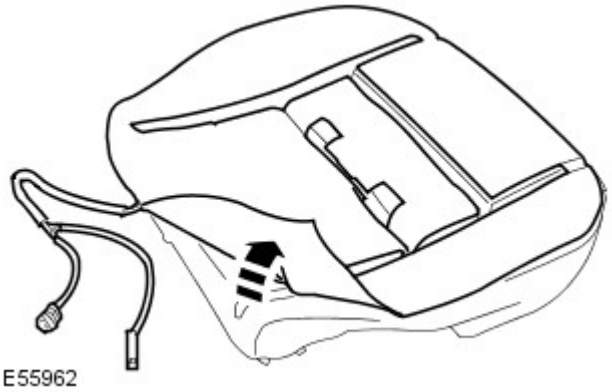

Installation

1. Install the front seat cushion heater mat.
2. Install the front seat cushion cover.
   For additional information, refer to: Front Seat Cushion Cover (501-10 Seating, Removal and Installation).

mcx30.com

Published: 11-May-2015

Seating - Third Row Seat Cushion Cover

Removal and Installation

Removal

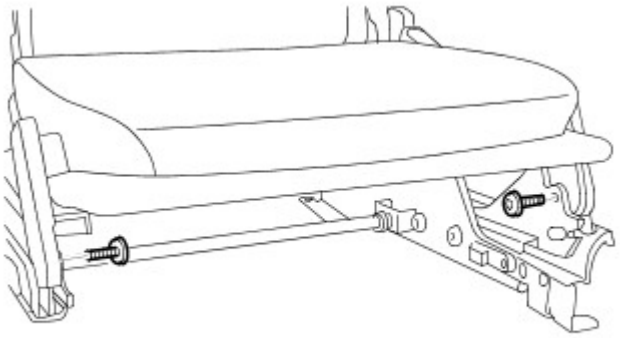

E56012

1. Remove the occasional seat cushion assembly.
   - Remove the 2 Torx bolts.

E56007

2. Remove the third row seat cushion latch covers.
   - Remove the 4 screws.

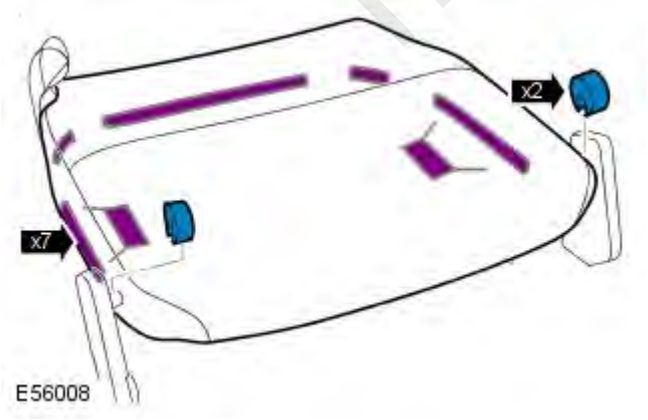

E56008

3. NOTE: Note the fitted position.

   Remove the third row seat cushion cover.
   - Remove the 2 spacers.
   - Release the 7 clips.

Installation

1. To install, reverse the removal procedure.
   - Tighten the Torx bolt to 25 Nm (18 lb.ft).

mex30.com

Published: 11-May-2015

Seating - Third Row Seat Cushion

Removal and Installation

Removal

• NOTE: In this procedure the cushion is removed as an assembly. There is a separate procedure for removing and installing the cushion cover.

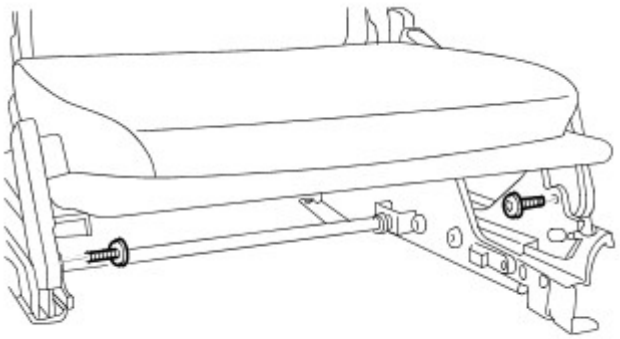

E56012

1. Remove the third row seat cushion.

- Remove the 2 Allen bolts.
- Release the cushion from the seat frame.

Installation

1. NOTE: Ensure seat cushion return springs are correctly located.

Install the third row seat cushion.

- Attach the cushion to the seat frame.
- Tighten the Allen bolts to 25 Nm (18 lb.ft).

mcx30.com

Published: 11-May-2015

Seating - Rear Seat Cushion CoverVehicles With: 60 / 40 Split Seat

Removal and Installation

Removal

• NOTE: This procedure shows the removal and installation of both the LH and the RH covers.

1. Fold the seat cushion forward.
2. Release the rear LH seat cushion cover.
   - Release the clip.

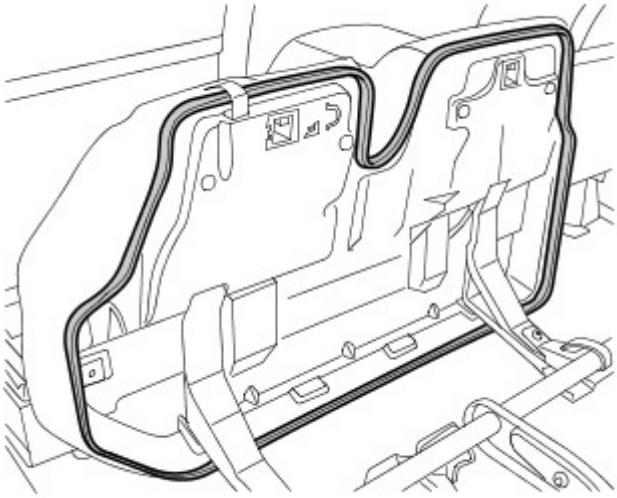

E55996

3. Remove the rear LH seat cushion cover.
   - Remove the 21 hog rings.

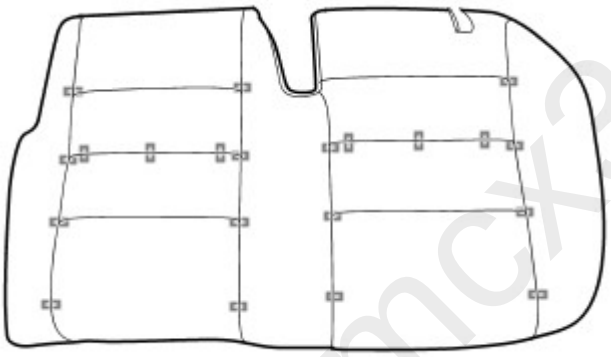

E56015

4. Release the rear RH seat cushion cover.
   - Release the clip.
5. Remove the rear RH seat cushion cover.
   - Remove the 10 hog rings.

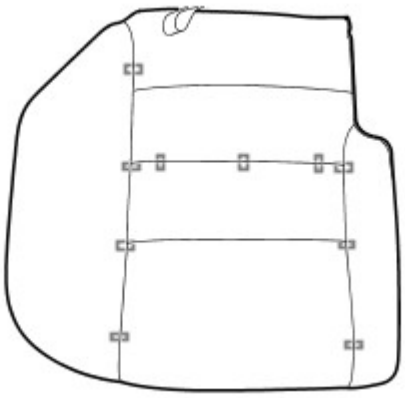

E56016

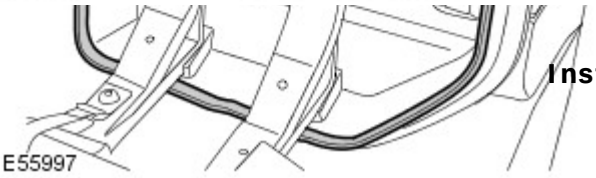

E55997

Installation

1. Install the rear seat cushion cover.
   - Install the hog rings.

mcx30.com

- Attach the retaining clip.

2. Fold the seat cushion rearwards.

mcx30.com

Seating - Rear Seat Cushion CoverVehicles With: 40/20/40 Split Seat

Removal and Installation

Removal

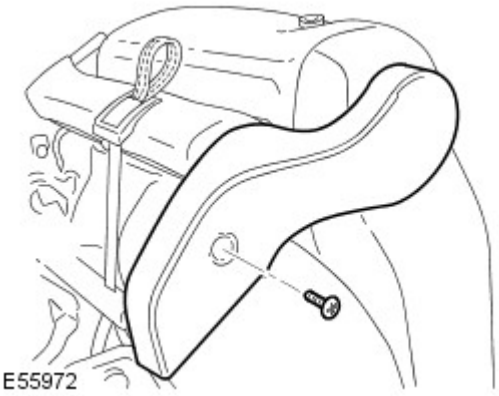

1. Remove the outer backrest hinge cover.

- Fold the seat assembly forwards.
- Remove the screw.

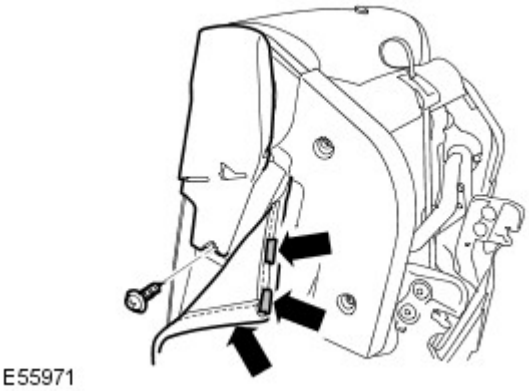

2. Remove the inner backrest hinge cover.

- Release the backrest cover side clip.
- Release the 2 clips.
- Remove the screw.

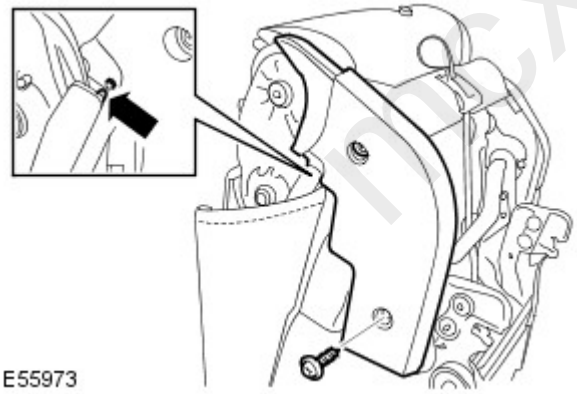

3. Remove the rear seat cushion side finisher.

- Remove the 2 screws.

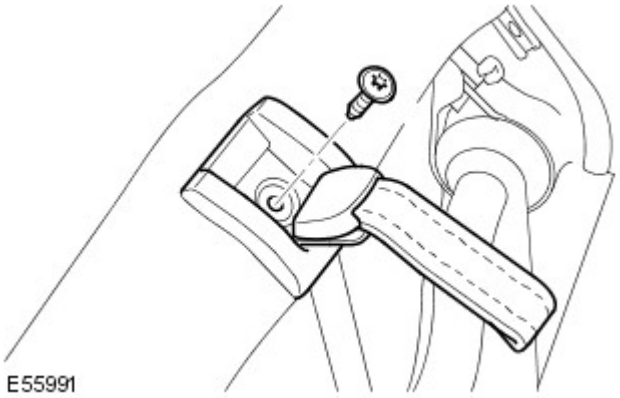

4. Remove the seat rear release strap finisher.

- Remove the screw.

mcx30.com

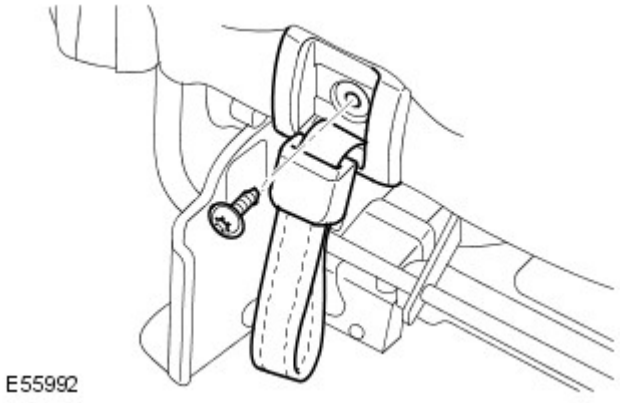

5. Remove the seat front release strap finisher.

- Remove the screw.

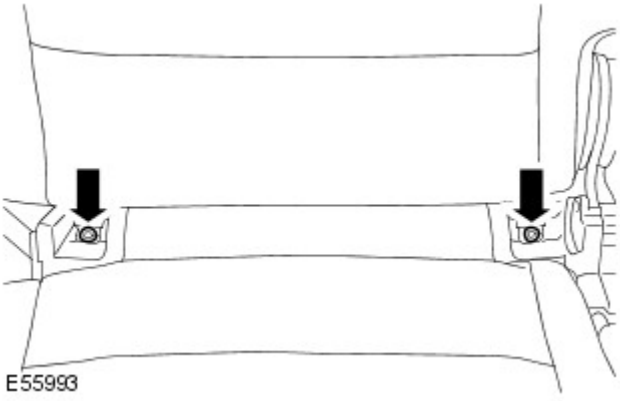

6. Remove the seat cushion finishers.

- Remove the 2 screws.

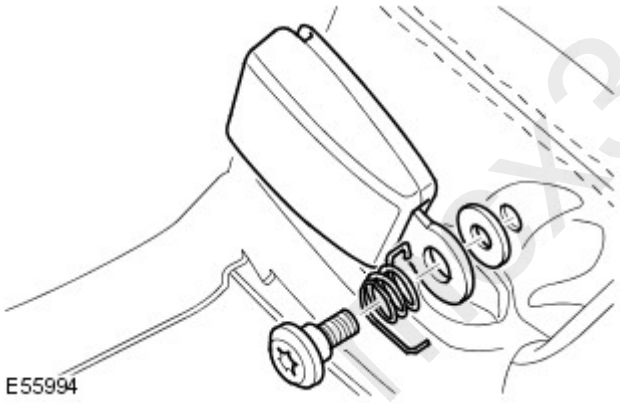

7. Remove the rear safety belt buckle.

- Remove the Torx bolt.
- Release the spring.

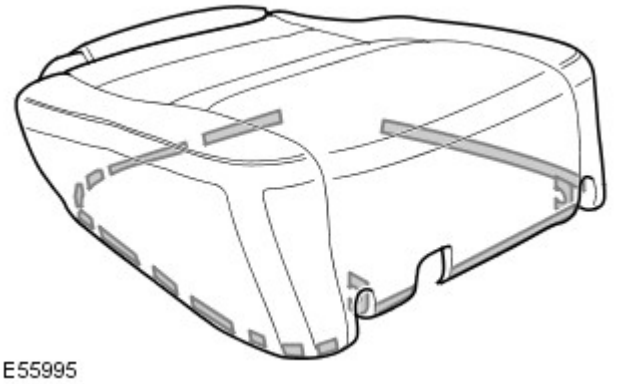

8. Release the rear seat cushion cover.

- Release the 15 clips.

fox30.com

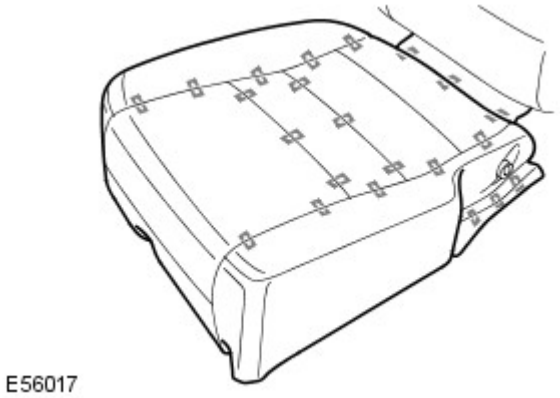

9. Remove the rear seat cushion cover.

- Remove the 22 hog rings.

Installation

1. Install the rear seat cushion cover.

- Install the hog rings.
- Install the clips.

2. Install the rear safety belt buckle.

- Attach the spring.
- Tighten the Torx bolt to 45 Nm (33 lb.ft).

3. Install the seat cushion finishers.

- Tighten the screws.

4. Install the seat front release strap finisher.

- Remove the screw.
- Tighten the screw.

5. Install the seat rear release strap finisher.

- Tighten the screw.

6. Install the inner backrest hinge cover.

- Attach the clips.
- Tighten the screw.

7. Install the outer backrest hinge cover.

- Tighten the screw.
- Fold seat assembly rearwards.

8. Install the rear seat cushion side finisher.

- Tighten the screws.

mcx30.com

Published: 11-May-2011

Seating - Front Seat Track Motor

Removal and Installation

Removal

1. Raise the seat base for access.
2. Remove the drive cable.
   - Disconnect the seat motor electrical connector.

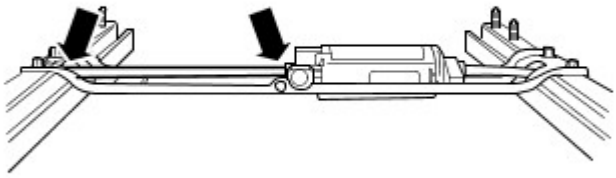

E131397

3. Remove the 2 clips.

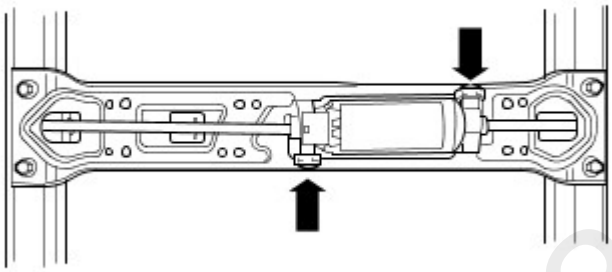

E131398

4. Remove the front seat track motor.

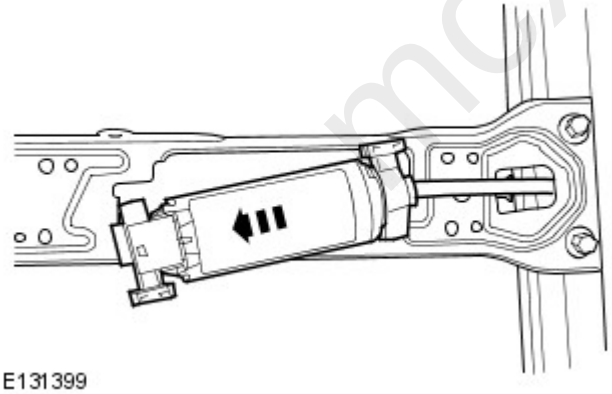

E131399

Installation

1. Install the front seat track motor.
   - Install the drive cable.
   - Install the 2 clips.
2. Install the drive cable.
   - Connect the seat motor electrical connector.

mcx30.com

Published: 11-May-2011

Seating - Front Seat Height Adjustment Motor

Removal and Installation

Removal

• NOTE: Front seat height adjustment motor is supplied as part of the front seat frame assembly.

1. Remove the front safety belt buckle.
   For additional information, refer to: Front Safety Belt Buckle (501-20, Removal and Installation).
2. Remove the front seat cushion assembly.
   For additional information, refer to: Front Seat Cushion (501-10, Removal and Installation).
3. Remove the front seat backrest assembly.
   - Release and disconnect the 2 electrical connectors.
   - Remove the 4 Torx bolts.

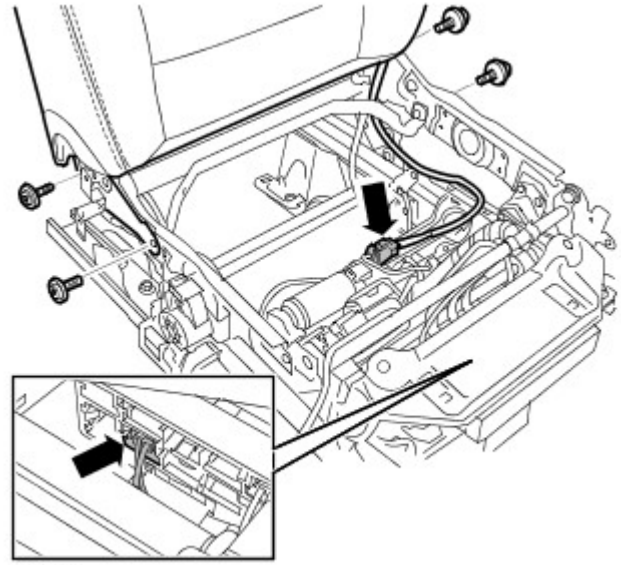

E56071

4. Remove the front seat electrical connector bracket.
   - Remove the 4 screws.

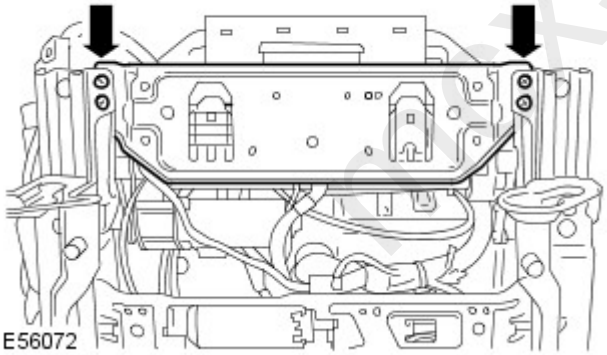

E56072

5. Remove the front seat tilt motor.
   - Release the 3 wiring harness clips.
   - Remove the 4 Torx bolts.

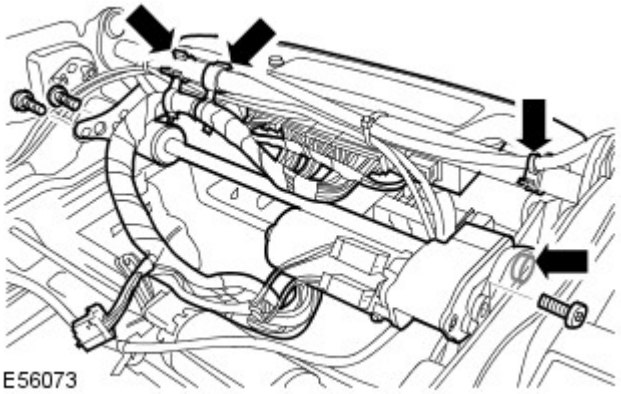

E56073

mx30.com

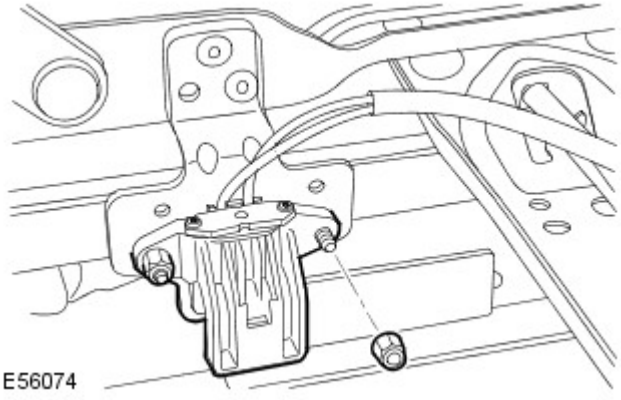

6. Remove the front seat position sensor.

- Remove the 2 nuts.

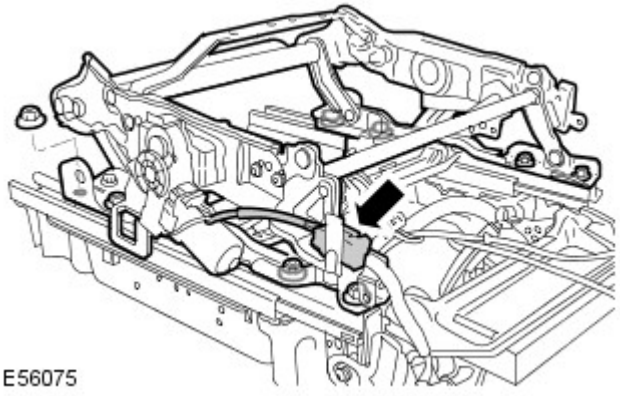

7. Remove the front seat height adjustment motor.

- Disconnect the electrical connector.
- Remove the 8 nuts.

Installation

1. Install the front seat height adjustment motor.

- Tighten the nuts to 25 Nm (18 lb.ft).
- Connect the electrical connector.

2. Install the front seat position sensor.

- Tighten the nuts to 4 Nm (3 lb.ft).

3. Install the front seat tilt motor.

- Tighten the Torx bolts to 10 Nm (7 lb.ft).
- Attach the wiring harness.

4. Install the front seat electrical connector bracket.

- Tighten the screws.

5. Install the front seat backrest assembly.

- Tighten the Torx bolts to 25 Nm (18 lb.ft).
- Connect and secure the electrical connectors.

6. Install the front seat cushion assembly.
For additional information, refer to: Front Seat Cushion (501-10, Removal and Installation).

7. Install the front safety belt buckle.
For additional information, refer to: Front Safety Belt Buckle (501-20, Removal and Installation).

mcx30.com

Published: 11-May-2011

Seating - Front Seat Tilt Motor

Removal and Installation

Removal

1. Remove the front seat.
   For additional information, refer to: Front Seat (501-10 Seating, Removal and Installation).
2. Remove the front seat cushion side finisher.
   - Remove the 2 Torx screws.
   - Release from the 3 clips.

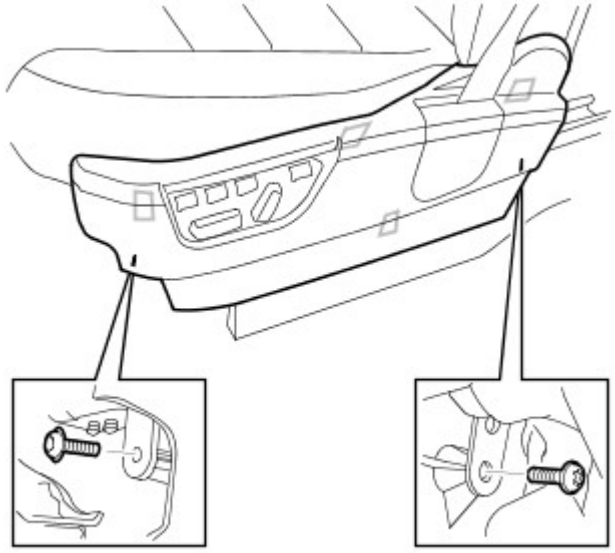

E56089

3. Release the front seat control switch.
   - Remove the 2 screws.
   - Remove the 2 clips.

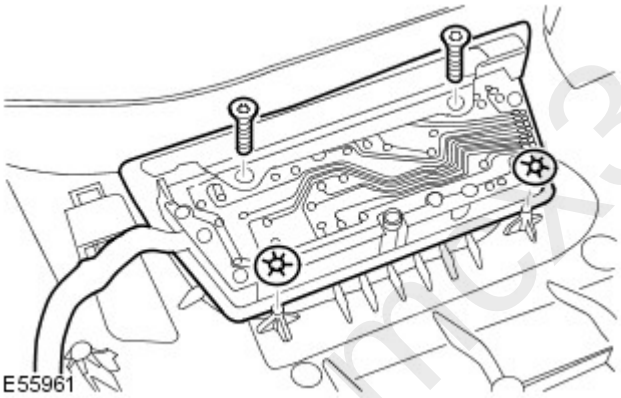

E55961

4. Remove the front seat cushion assembly.
   For additional information, refer to: Front Seat Cushion (501-10 Seating, Removal and Installation).
5. Remove the front seat tilt motor assembly.
   - Remove the 4 Torx bolts.
   - Disconnect the 7 electrical connectors.

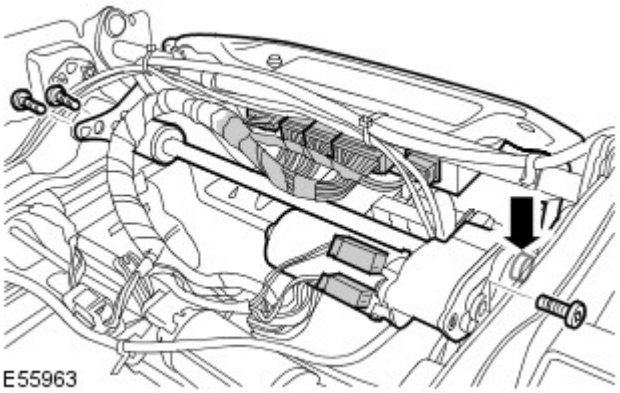

E55963

mcx30.com

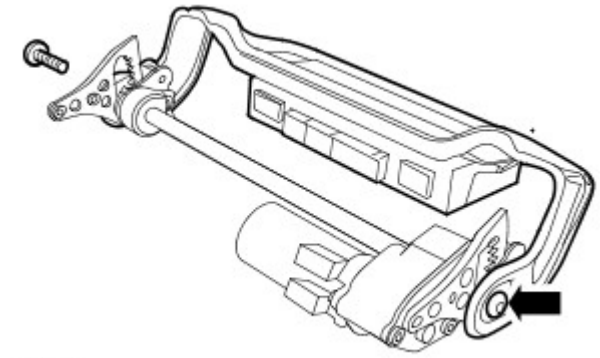

6. NOTE: Do not disassemble further if the component is removed for access only.

Remove the seat module bracket.

- Remove the 2 Torx bolts.

Installation

1. Install the seat module bracket.

- Tighten the Torx bolts to 10 Nm (7 lb.ft).

2. Install the front seat tilt motor assembly.

- Tighten the 4 Torx bolts to 10 Nm (7 lb.ft).
- Connect the electrical connectors.

3. Install the front seat cushion assembly.
For additional information, refer to: Front Seat Cushion (501-10 Seating, Removal and Installation).

4. Install the front seat cushion side finisher.

- Secure in the clips.
- Tighten the screws.

5. Install the front seat control switch.

- Secure in the clips.
- Tighten the screws.

6. Install the front seat.
For additional information, refer to: Front Seat (501-10 Seating, Removal and Installation).

mcx30.com

Published: 11-May-2011

Seating - Front Seat Recliner Motor

Removal and Installation

Removal

1. Remove the front seat backrest cover.
   For additional information, refer to: Front Seat Backrest Cover (501-10 Seating, Removal and Installation).
2. Remove the front seat backrest pad.
3. Remove the front seat recliner motor.
   - Disconnect the electrical connector.
   - Remove the Torx bolt.
   - Remove the front seat backrest shaft clip.
   - Remove the front seat backrest shaft.

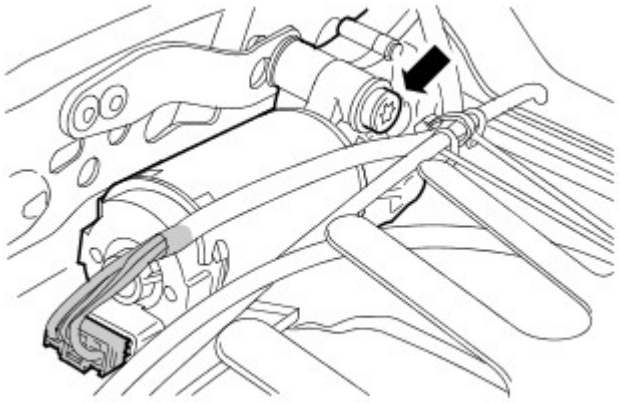

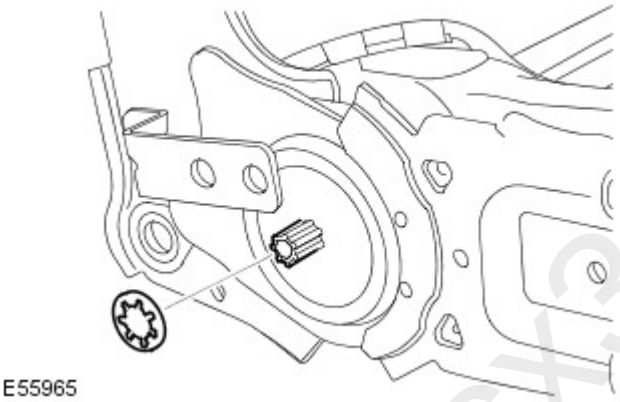

Installation

1. Install the front seat recliner motor.
   - Install the front seat backrest shaft.
   - Install the front seat backrest shaft clip.
   - Tighten the Torx bolt to 10 Nm (7 lb.ft).
   - Connect the electrical connector.
2. Install the front seat backrest pad.
3. Install the front seat backrest cover.
   For additional information, refer to: Front Seat Backrest Cover (501-10 Seating, Removal and Installation).

mcx30.com

Published: 11-May-2011

Seating - Front Seat Control Switch

Removal and Installation

Removal

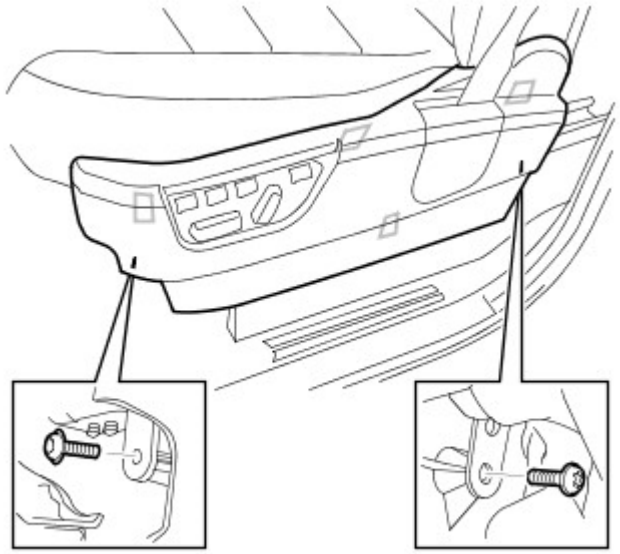

1. Remove the front seat cushion side finisher.
   - Remove the 2 screws.
   - Release from the 3 clips.

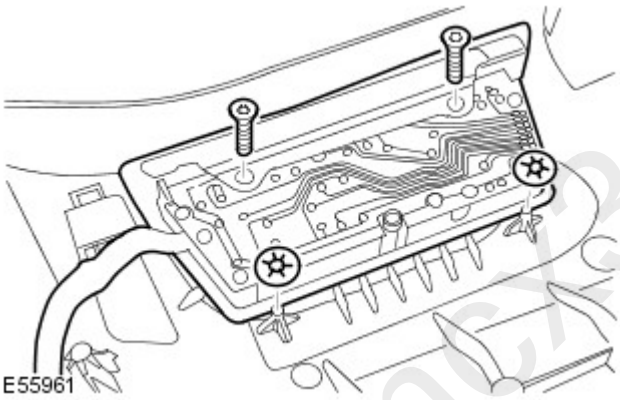

2. Remove the front seat control switch.
   - Disconnect the electrical connector.
   - Release the front seat control switch harness.
   - Remove the 2 screws.
   - Remove the 2 clips.

Installation

1. Install the front seat cushion side finisher.
   - Secure in the clips.
   - Tighten the screws.
2. Install the front seat control switch.
   - Secure in the clips.
   - Tighten the screws.
   - Connect the electrical connector.
   - Attach the wiring harness.

mex30.com

Published: 11-May-2011

Seating - Front Seat Backrest Cover

Removal and Installation

Removal

- WARNINGS:

To avoid accidental deployment, the restraints control module backup power supply must be depleted. Wait at least one minute after disconnecting the battery ground cable(s) before commencing any repair or adjustment to the supplemental restraint system (SRS), or any component(s) adjacent to the SRS sensors. Failure to follow these instructions may result in personal injury.

Always wear safety glasses when working on an air bag equipped vehicle and when handling an air bag module. Failure to follow this instruction may result in personal injury.

To minimize the possibility of premature deployment, do not use radio key code savers when working on the supplemental restraint system. Failure to follow this instruction may result in personal injury.

To minimize the possibility of injury in the event of premature deployment, always carry a live air bag module with the bag and trim cover pointed away from the body. Failure to follow this instruction may result in personal injury.

To minimize the possibility of premature deployment, live air bag modules must only be placed on work benches which have been ground bonded and with the trim cover facing up. Failure to follow these instructions may result in personal injury.

Never probe the electrical connectors of air bag modules or any other supplemental restraint system component. Failure to follow this instruction may result in personal injury.

Painting over the driver air bag module trim cover or instrument panel could lead to deterioration of the trim cover and air bags. Do not for any reason attempt to paint discolored or damaged air bag module trim covers or instrument panel. Install a new component. Failure to follow this instruction may result in personal injury.

Make sure that sufficient time has elapsed after disconnecting the battery ground cable(s), before commencing work on the supplemental restraint system (SRS). Failure to follow these instructions may result in personal injury.

1. Make the SRS system safe.
   For additional information, refer to: Standard Workshop Practices (100-00 General Information, Description and Operation).
2. Remove the front safety belt buckle.
   For additional information, refer to: Front Safety Belt Buckle (501-20A Safety Belt System, Removal and Installation).
3. Remove the front seat cushion side trim.
   - Remove the 2 screws.
   - Release from the 3 clips.

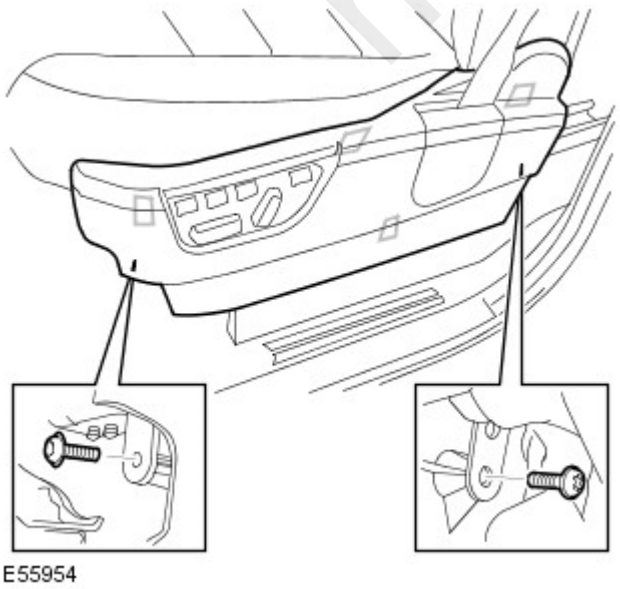

mcx30.com

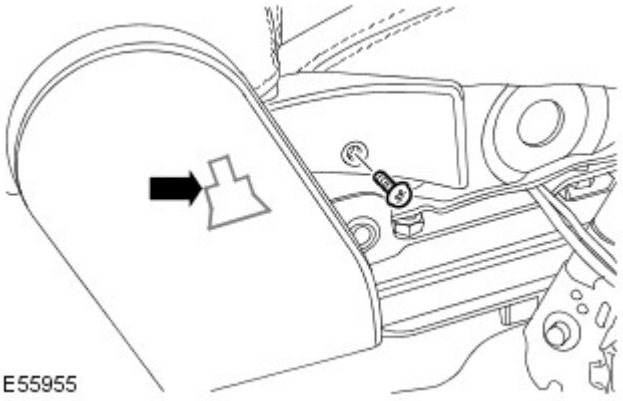

4. Remove the front seat backrest hinge cover.

- Remove the 2 screws.
- Release from the clip.

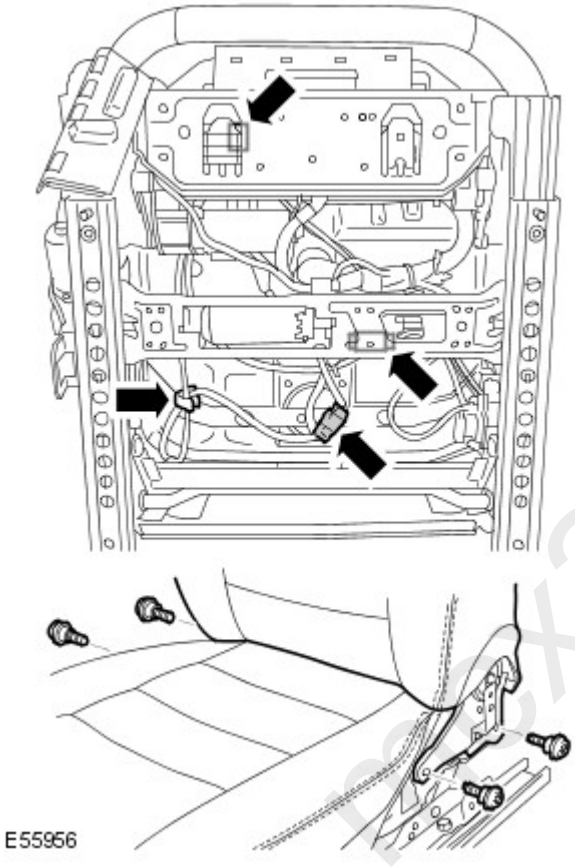

5. Remove the front seat backrest assembly.

- Release the retaining clips and disconnect the three electrical connectors.
- Remove the 4 Torx bolts.

6. Remove the front seat grab handles.

- Remove the bolt covers.
- Remove the 2 bolts.

rex30.com

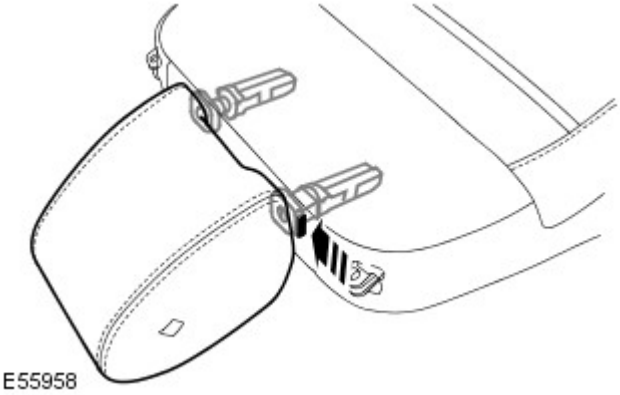

7. NOTE: Head restraint release latch is underneath backrest cover.

Remove the front seat head restraint.

- Release the front seat head restraint latch.

8. Remove the seat armrest.
For additional information, refer to: Front Seat Armrest (501-10, Removal and Installation).

9. Remove the front seat lumbar adjustment knob.

- Pull sharply to release from lumbar mechanism.

mcx30.com

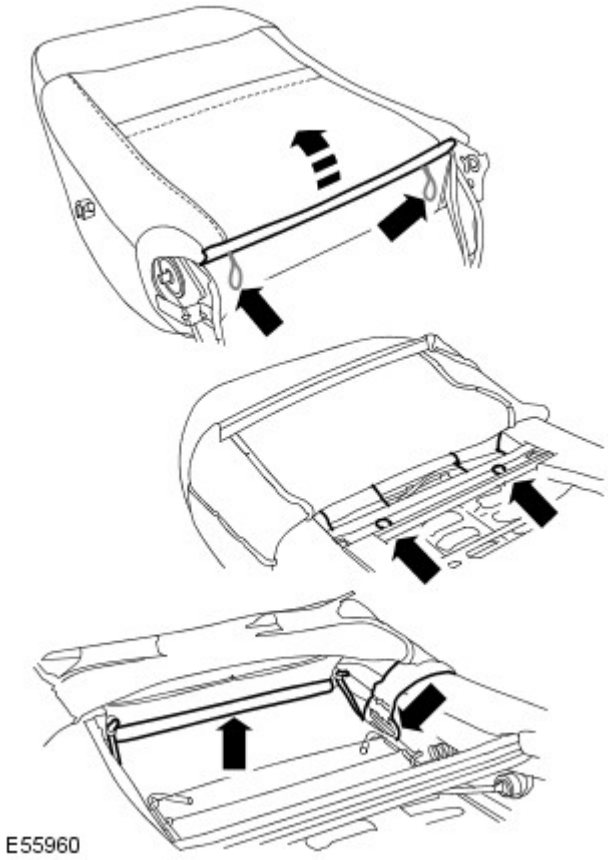

10. Release the front seat backrest cover.

- Release the 5 clips.
- Release the tension straps.

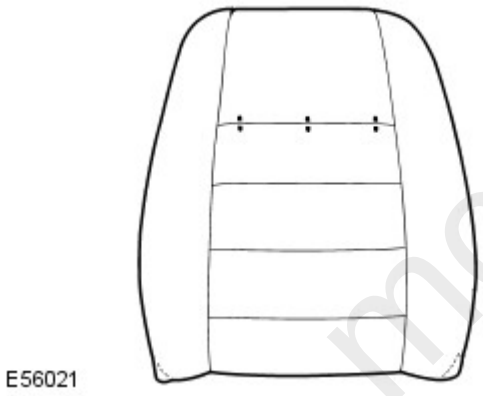

11. Remove the front seat backrest cushion and cover from the front seat frame.

- Remove the 3 hog rings.

mcx30.com

Installation

1. Install the front sear backrest cover.

- Install the hog rings.
- Install the clips.
- Attach the tension straps.

2. Install the front seat lumbar adjustment knob.

- Push firmly to secure to the lumbar mechanism.

3. Install the seat armrest.
For additional information, refer to: Front Seat Armrest (501-10, Removal and Installation).

4. Install the front seat head restraint.

5. Install the front seat grab handles.

- Tighten the bolts to 25 Nm (18 lb.ft).
- Install the bolt covers.

6. Install the front seat backrest assembly.
   - Tighten the Torx bolts to 25 Nm (18 lb.ft).
   - Connect and secure the electrical connectors.
7. Install the front seat backrest hinge cover.
   - Tighten the screws.
   - Fit the clip.
8. Install the front seat cushion side trim.
   - Position and secure in the clips.
   - Install the screws.
9. Install the front safety belt buckle.
   For additional information, refer to: Front Safety Belt Buckle (501-20A Safety Belt System, Removal and Installation).

mcx30.com

Published: 11-May-2011

Seating - Third Row Seat Backrest Cover

Removal and Installation

Removal

1. Fold the seat cushion assembly forwards.
2. Remove the seat backrest hinge inner covers.
   - Release the clip.

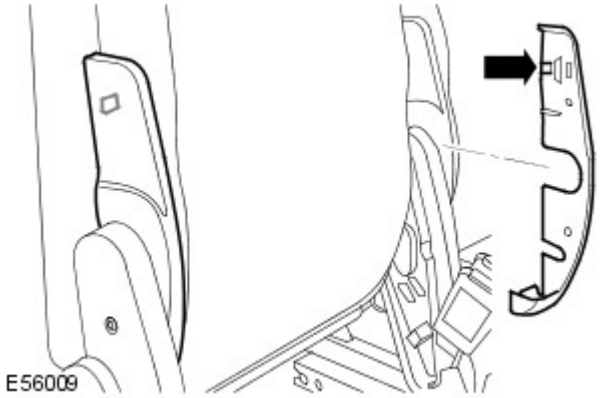

3. Remove the seat backrest latch covers.
   - Remove the 2 screws.

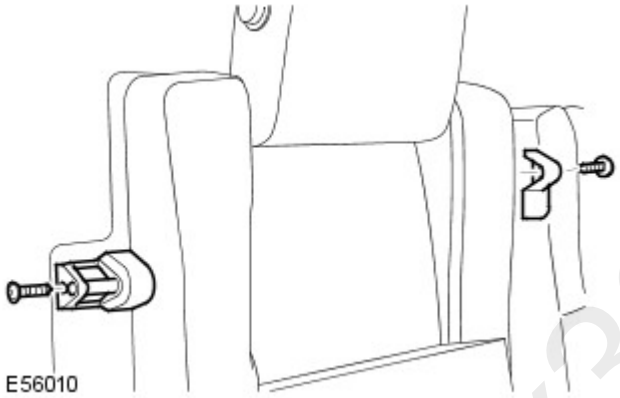

4. Remove the seat backrest cover.
   - Fold the seat cushion forward.
   - Release the 14 clips.

Installation

1. To install, reverse the removal procedure.

mcx30.com

Published: 11-May-2011

Seating - Front Seat Backrest Heater Mat

Removal and Installation

Removal

1. Remove the front seat backrest cover.
   For additional information, refer to: Front Seat Backrest Cover (501-10 Seating, Removal and Installation).

2. NOTE: Front seat cushion heater mat shown in illustration. Removal of backrest heater mat is the same.

   Remove the front seat backrest heater mat.

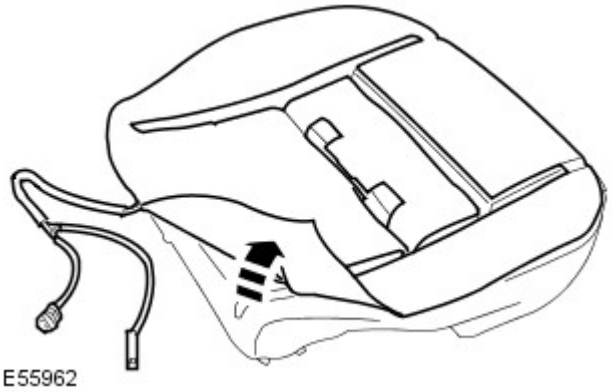

Installation

1. Install the front seat backrest heater mat.
2. Install the front seat backrest cover.
   For additional information, refer to: Front Seat Backrest Cover (501-10 Seating, Removal and Installation).

mcx30.com

Published: 11-May-2011

Seating - Rear Seat Backrest CoverVehicles With: 60 / 40 Split Seat

Removal and Installation

Removal

- NOTE: This procedure shows the removal of both the LH and RH covers.

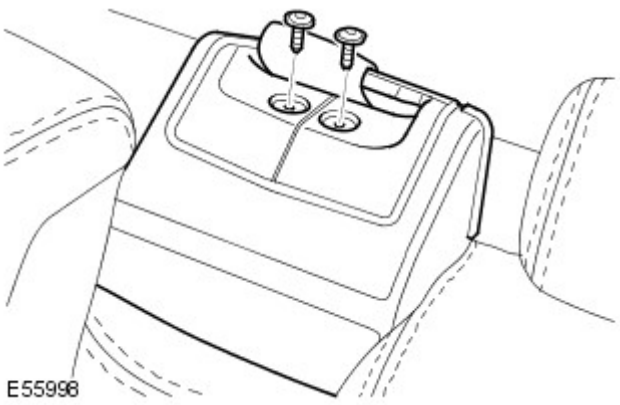

1. LH seat only: Remove the safety belt retractor cover and guide.

- Remove the 2 screws.

2. Remove the rear seat release handle.

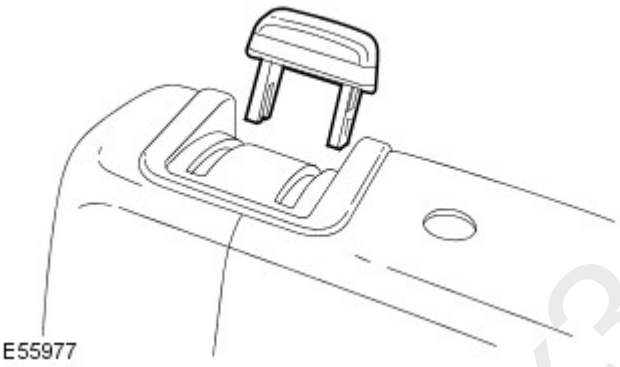

3. Remove the rear seat release handle finisher.

- Remove the screw.

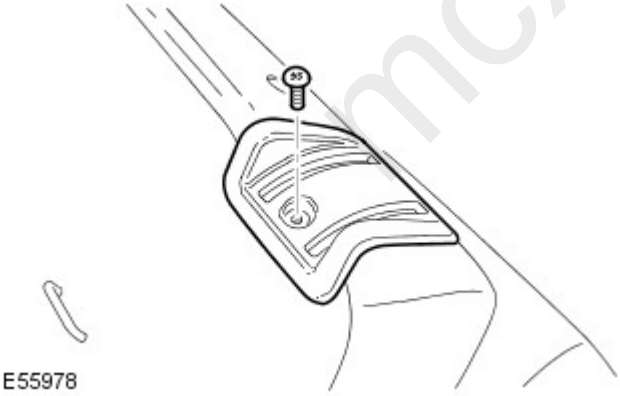

mcx30.com

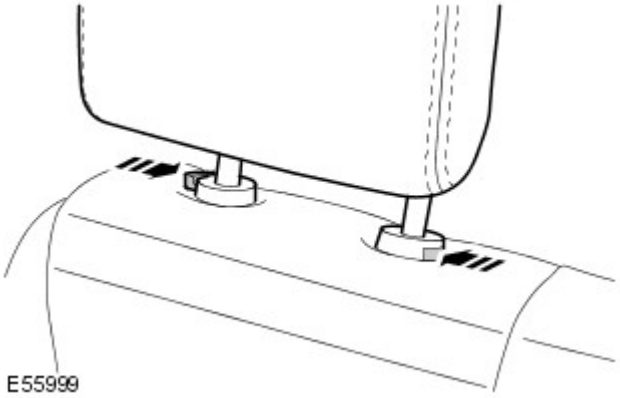

4. Remove the rear seat head restraint.

- Depress the 2 retaining clips.

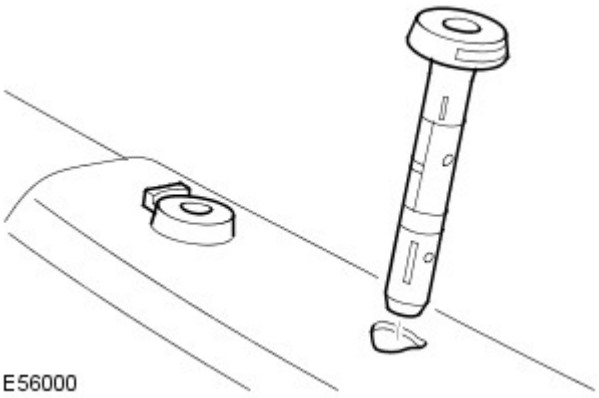

5. Remove the rear seat head restraint retaining clips.

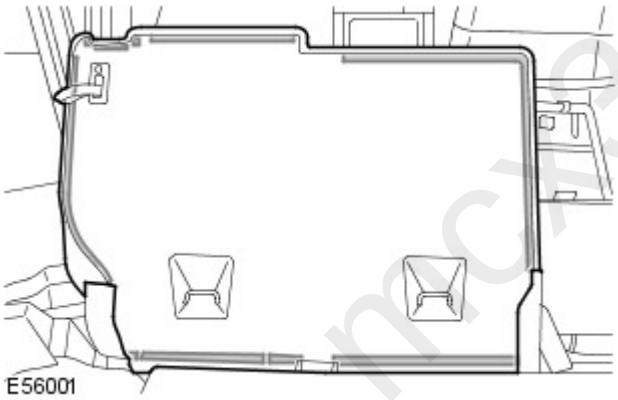

6. Release the rear LH seat backrest cover.

- Release the 10 clips.

mcx30.com

7. Remove the rear LH seat backrest cover.

- Remove the 41 hog rings.

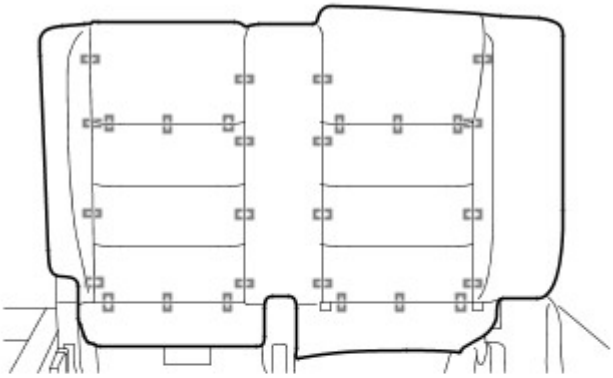

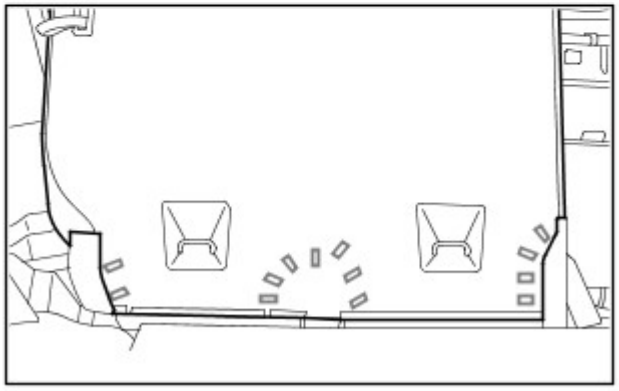

E56013

8. Release the rear RH seat backrest cover.

- Release the 9 clips.

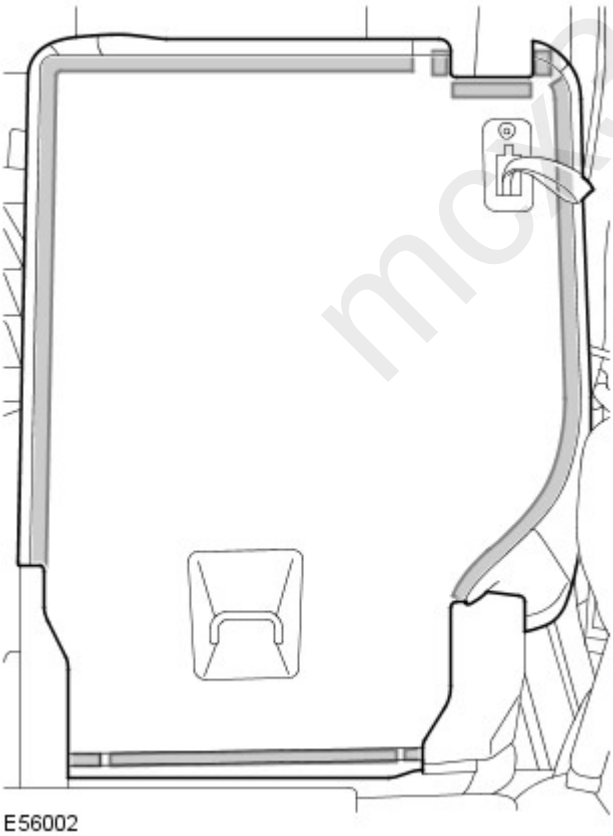

E56002

mo630.com

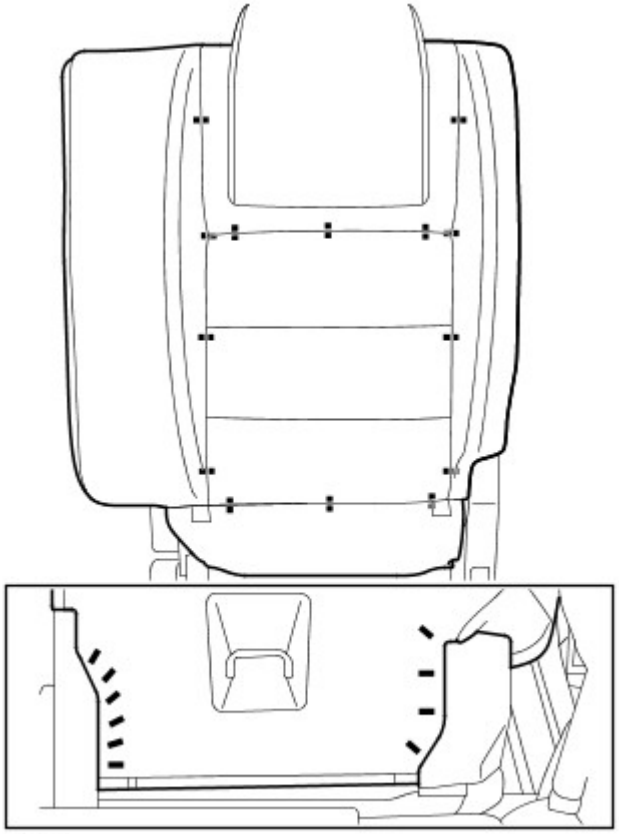

9. Remove the rear RH seat backrest cover.

- Remove the 24 hog rings.

Installation

1. Install the rear seat backrest cover.

- Install the hog rings.
- Attach the clips.

2. Install the rear seat head restraint retaining clips.

3. Install the rear seat head restraint.

4. Install the rear seat release handle finisher.

- Tighten the screw.

5. Install the rear seat release handle.

6. Install the safety belt guide and retractor cover.

- Attach the safety belt guide and retractor cover.
- Tighten the screws.

mcx30.com

Seating - Rear Seat Backrest CoverVehicles With: 40 / 20 / 40 Split Seat

Removal and Installation

Removal

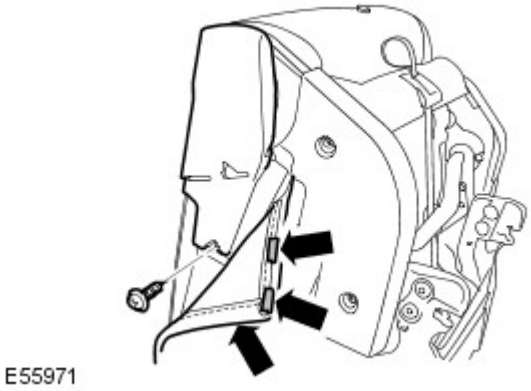

1. Remove the inner backrest hinge cover.

- Release the backrest cover side clip.
- Remove the screw.
- Release the 2 clips.

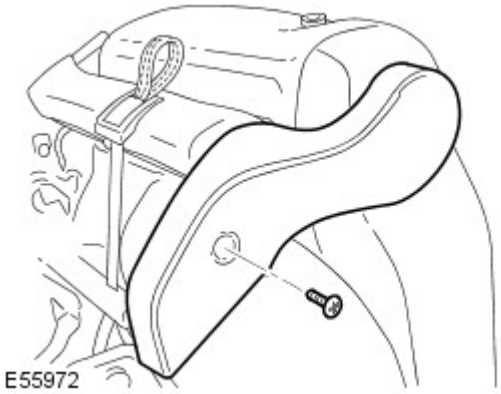

2. Remove the outer backrest hinge cover.

- Remove the screw.

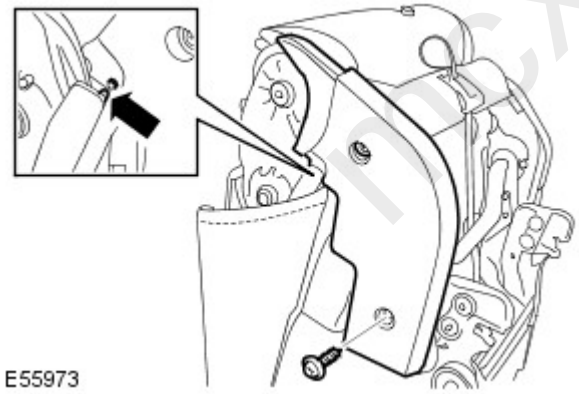

3. Remove the rear seat cushion side finisher.

- Remove the 2 screws.

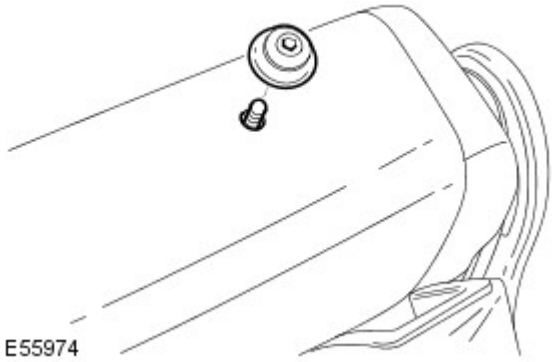

4. Remove the luggage strap tether.

- Remove the Allen bolt.

mcx30.com

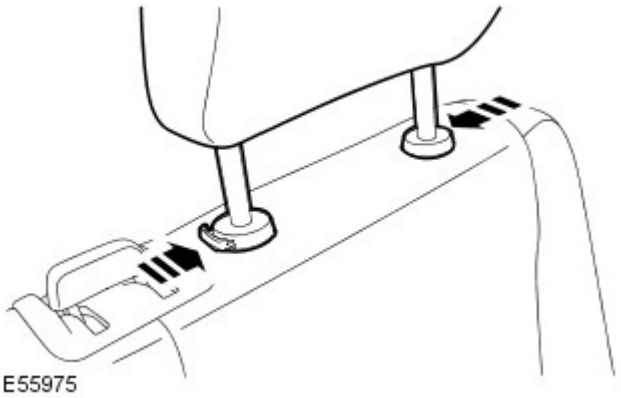

5. Remove the rear seat head restraint.

- Depress the 2 retaining clips.

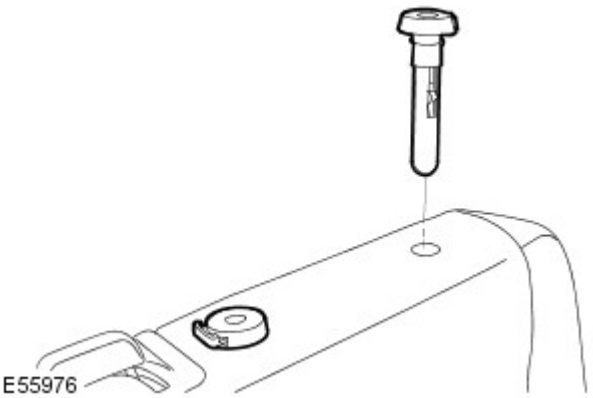

6. Remove the rear seat head restraint retaining clips.

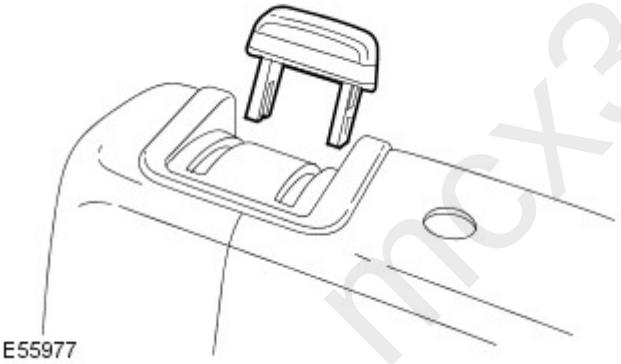

7. Remove the rear seat release handle.

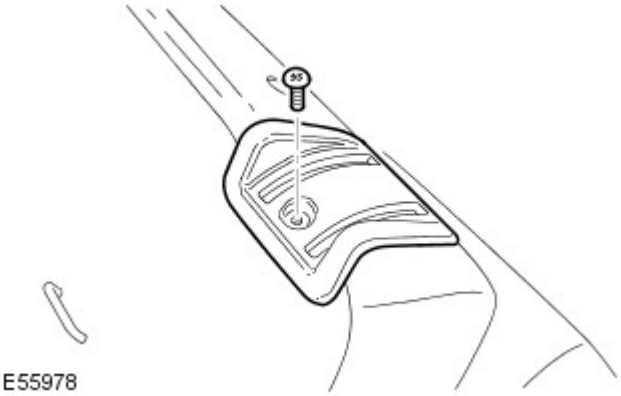

8. Remove the rear seat release handle finisher.

- Remove the screw.

mcx30.com

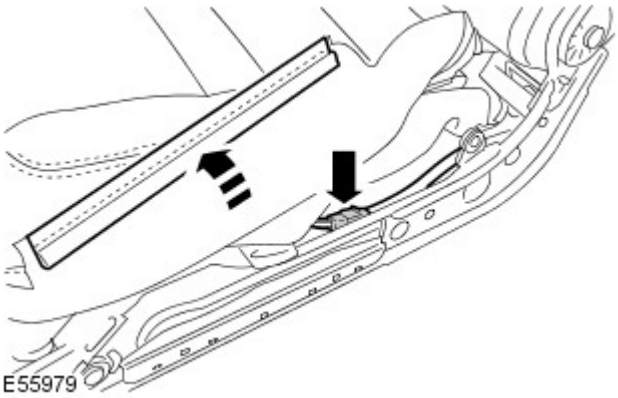

9. Disconnect the backrest heater mat electrical connector.

- Release the rear seat cushion side clip.

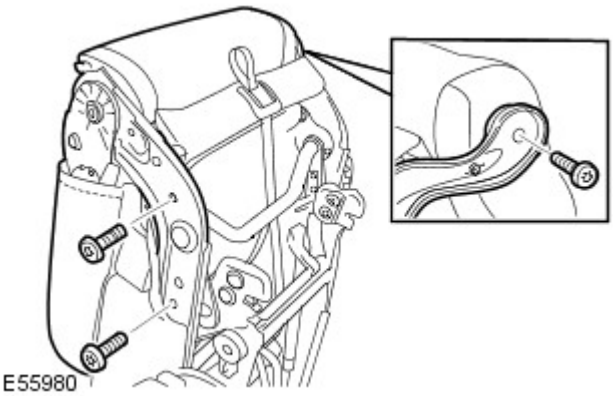

10. Remove the rear seat backrest assembly.

- Remove the 3 Torx bolts.

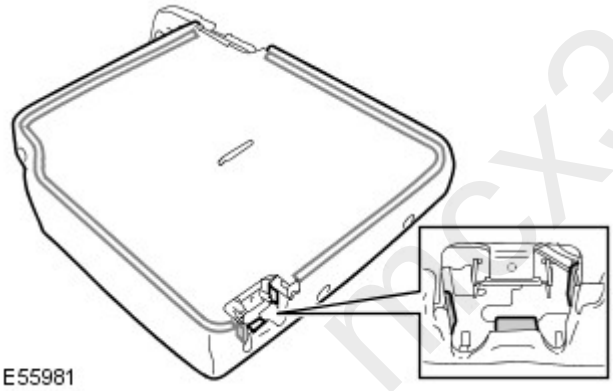

11. Release the rear seat backrest cover.

- Release the 5 clips.

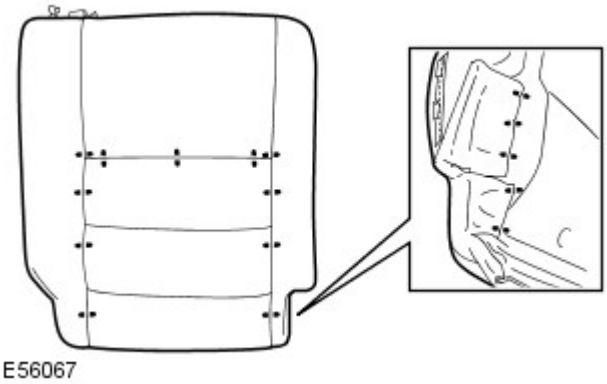

12. Remove the rear seat backrest cover.

- Remove the 16 hog rings.

Installation

1. Install the rear seat backrest cover.

- Install the 16 hog rings.

mcx30.com

- Attach the 4 clips.

2. Install the rear seat backrest assembly.

- Tighten the Torx bolts to 45 Nm (33 lb.ft).

3. Connect the backrest heater mat electrical connector.

- Attach the rear seat cushion side clip.

4. Install the rear seat release handle finisher.

- Tighten the screw.

5. Install the rear seat release handle.
6. Install the rear seat head restraint retaining clips.
7. Install the rear seat head restraint.
8. Install the luggage strap tether.
9. Install the rear seat cushion side finisher.

- Tighten the screws.

10. Install the outer backrest hinge cover.

- Tighten the screws.
- Tighten the screw.

11. Install the inner backrest hinge cover.

- Attach the clips.
- Tighten the screw.
- Attach the backrest cover side clip.

mcx30.com

Published: 11-May-2011

Seating - Seat TrackVehicles Without: Power Seats

Removal and Installation

Removal

1. Remove the front safety belt buckle.
   For additional information, refer to: Front Safety Belt Buckle (501-20A Safety Belt System, Removal and Installation).
2. Remove the front seat cushion side trim.
   - Remove the 2 Torx screws.
   - Release from the 4 clips.

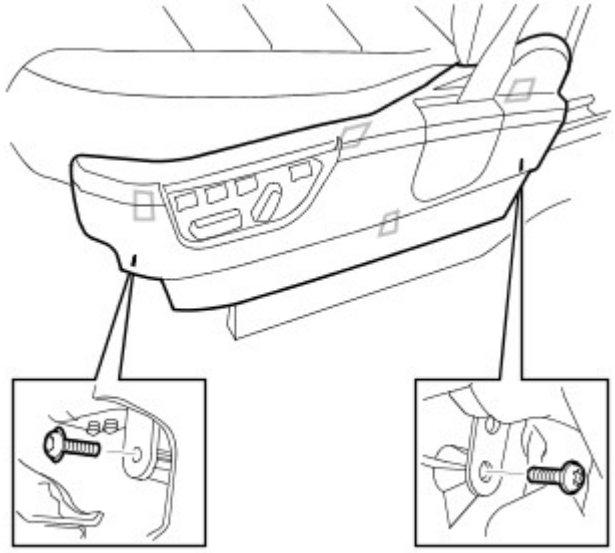

E56089

3. Remove the front seat base trim.
   - Remove the screw.
   - Release the 2 clips.

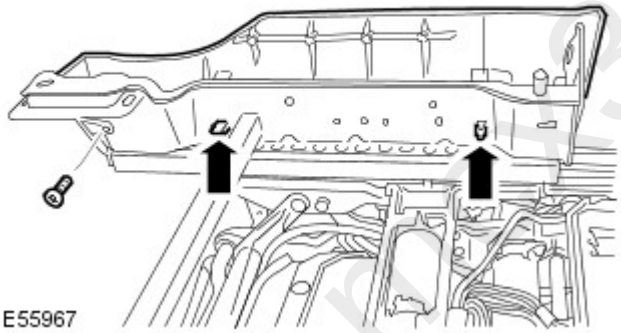

E55967

4. Remove the front seat base.
   - Remove the 6 nuts.

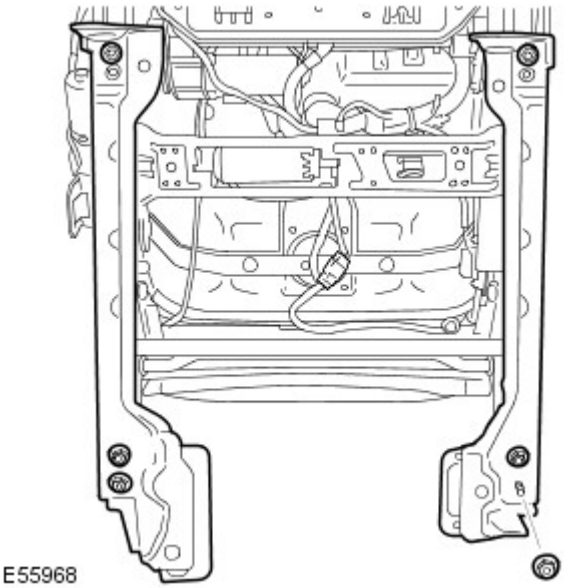

E55968

mx30.com

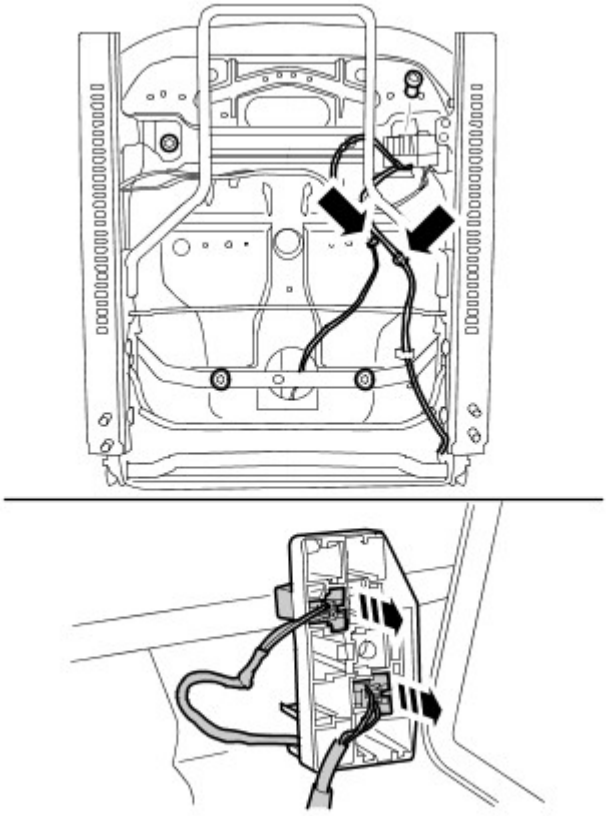

E59785

5. Remove the front seat cushion assembly.
   - Release and disconnect the 2 electrical connectors.
   - Remove the 4 Torx bolts.

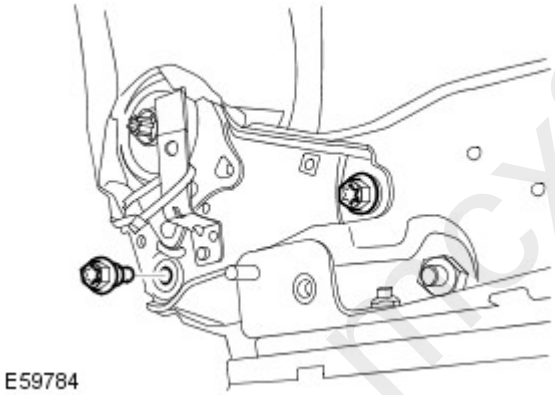

E59784

6. Remove the seat track assembly.
   - Remove the 4 Torx bolts.

mcx30.com

Installation

1. Install the seat track assembly.
   - Tighten the Torx bolts to 25 Nm (18 lb.ft).
2. Install the front seat cushion assembly.
   - Tighten the Torx bolts to 25 Nm (18 lb.ft).
   - Connect and secure the electrical connectors.
3. Install the front seat base.
   - Tighten the nuts to 25 Nm (18 lb.ft).
4. Install the front seat base trim.
   - Secure in the clips.
   - Tighten the screw.
5. Install the front seat cushion side trim.

- Secure in the clips.
- Tighten the screws.

6. Install the front safety belt buckle.
For additional information, refer to: Front Safety Belt Buckle (501-20A Safety Belt System, Removal and Installation).

mcx30.com

Published: 11-May-2011

Seating - Seat TrackVehicles With: Power Seats

Removal and Installation

Removal

- NOTE: The front seat track motor is supplied as part of the front seat lower frame assembly.

1. Remove the front seat.
For additional information, refer to: Front Seat (501-10 Seating, Removal and Installation).

2. Remove the front seat cushion side trim.

- Remove the 2 Torx screws.
- Release from the 4 clips.

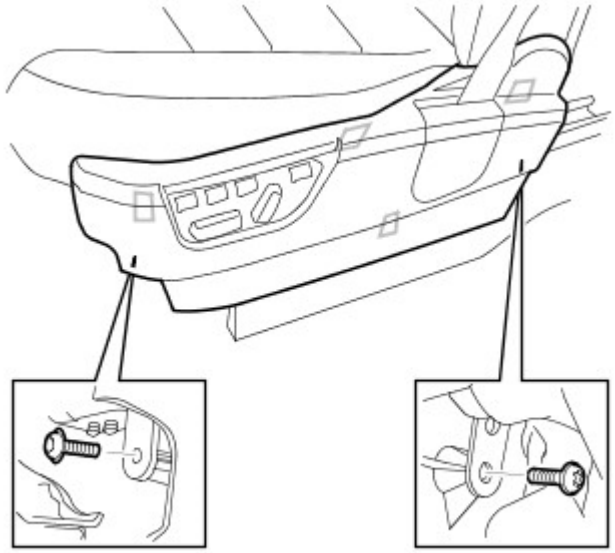

E56089

3. Release the seat control switch.

- Remove the 2 screws.
- Remove the 2 clips.

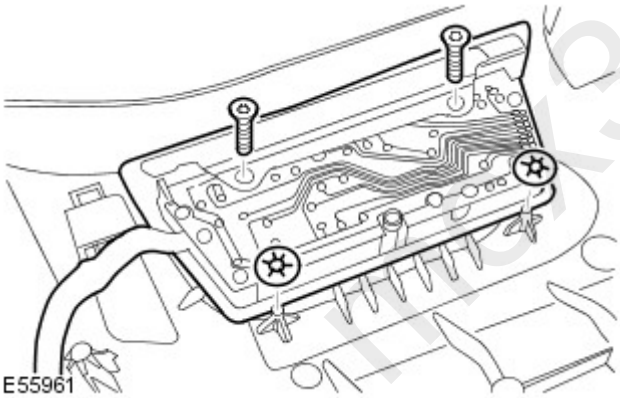

E55961

4. Remove the front seat base trim.

- Remove the screw.
- Release the 2 clips.

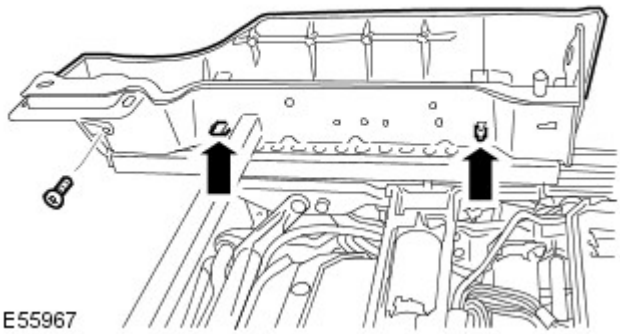

E55967

mk30.com

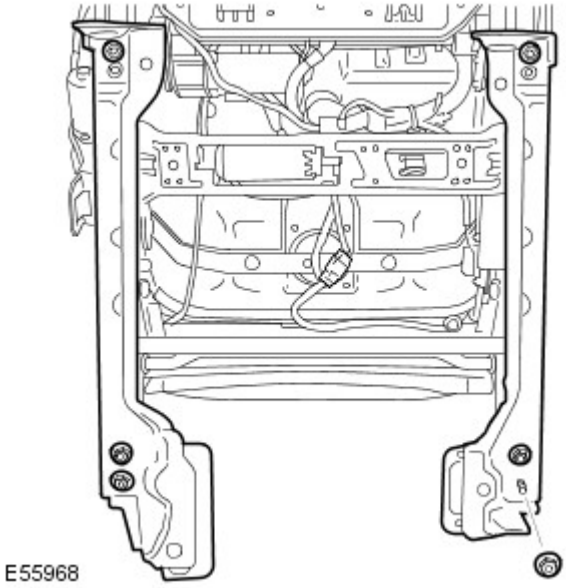

5. Remove the front seat base.

- Remove the 6 nuts.

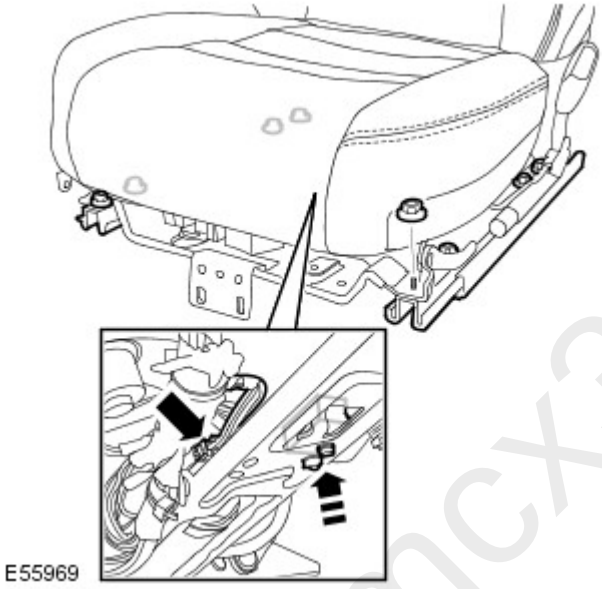

6. Remove the front seat track motor.

- Disconnect the electrical connector.
- Release the electrical connector.
- Remove the 8 nuts.

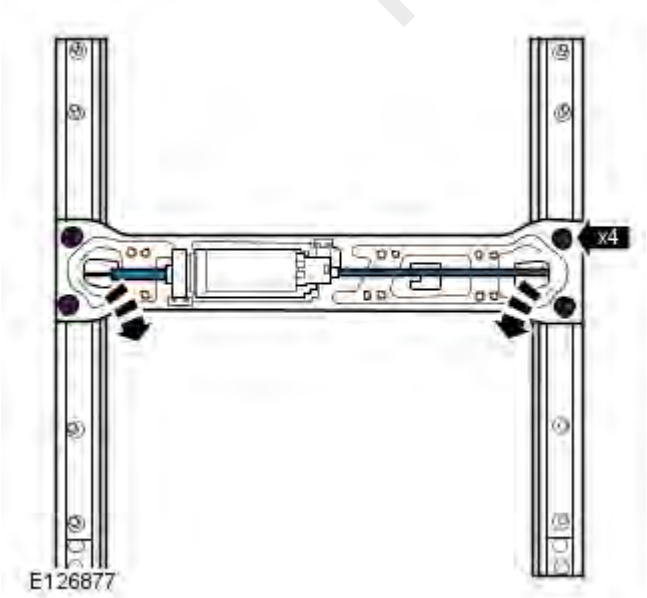

7. Remove the front seat track motor assembly from the seat rails.

- Remove the 4 bolts.
- Release the flexi drive from the seat rails.

mcx30.com

Installation

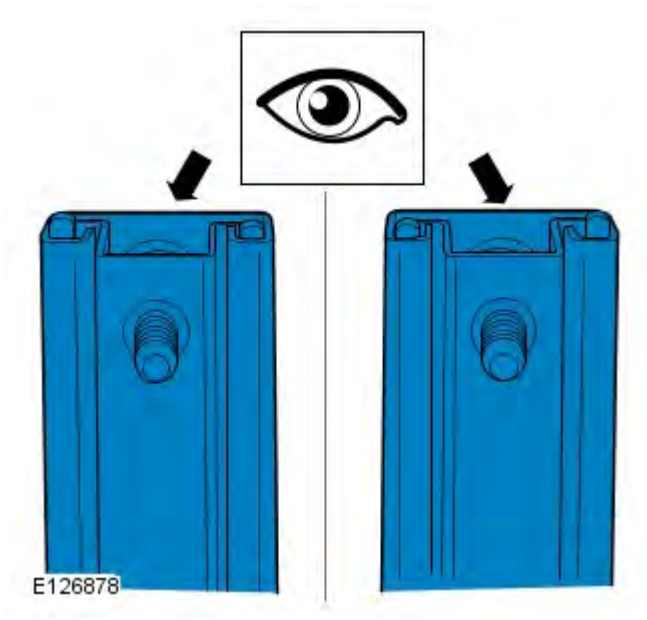

1. Make sure the seat rails are installed as a matched pair as supplied.
   - Make sure the seat rails are correctly aligned.

2. Install the front seat track motor assembly to the seat rails.
   - Install the 4 bolts.
   - Tighten the nuts to 10 Nm (7 lb.ft).
3. Install the front seat track motor.
   - Tighten the nuts to 22 Nm (16 lb.ft).
   - Connect the electrical connector.
   - Secure the electrical connector.
4. Install the front seat base.
   - Tighten the nuts to 22 Nm (16 lb.ft).
5. Install the front seat base trim.
   - Secure in the clips.
   - Tighten the screw.
6. Install the front seat cushion side trim.
   - Secure in the clips.
   - Tighten the screws.
7. Install the seat control switch.
   - Secure in the clips.
   - Tighten the screws.
8. Install the front seat.
   For additional information, refer to: Front Seat (501-10 Seating, Removal and Installation).

mcx30.com

Published: 11-May-2011

Seating - Front Seat Manual Height Adjustment Lever

Removal and Installation

Removal

1. Remove the drivers side seat slides.
   For additional information, refer to: Seat Track - Vehicles With: Power Seats (501-10 Seating, Removal and Installation).
2. Remove the front seat cushion base.
   For additional information, refer to: Front Seat Cushion (501-10 Seating, Removal and Installation).
3.

4.

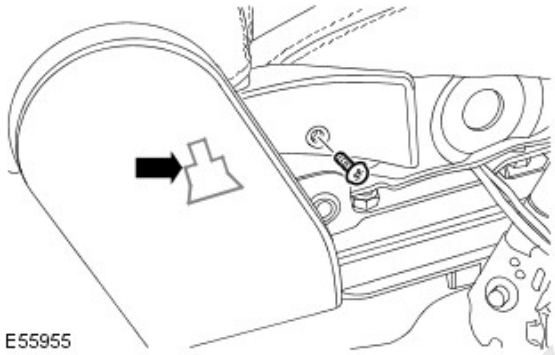

5. TORQUE: 25 Nm

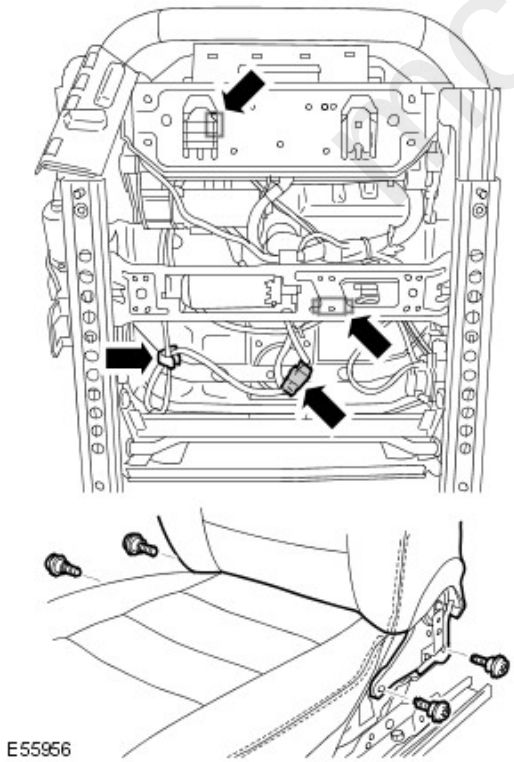

mcx30.com

6. CAUTIONS:

Tie straps must be fitted, failure to follow this instruction may result in personal injury.

Failure to follow this instruction may cause damage to the vehicle.

Secure the seat base using the 4 tie straps supplied, as shown.

- Using the seat height adjuster, lower the seat base to its lowest position.

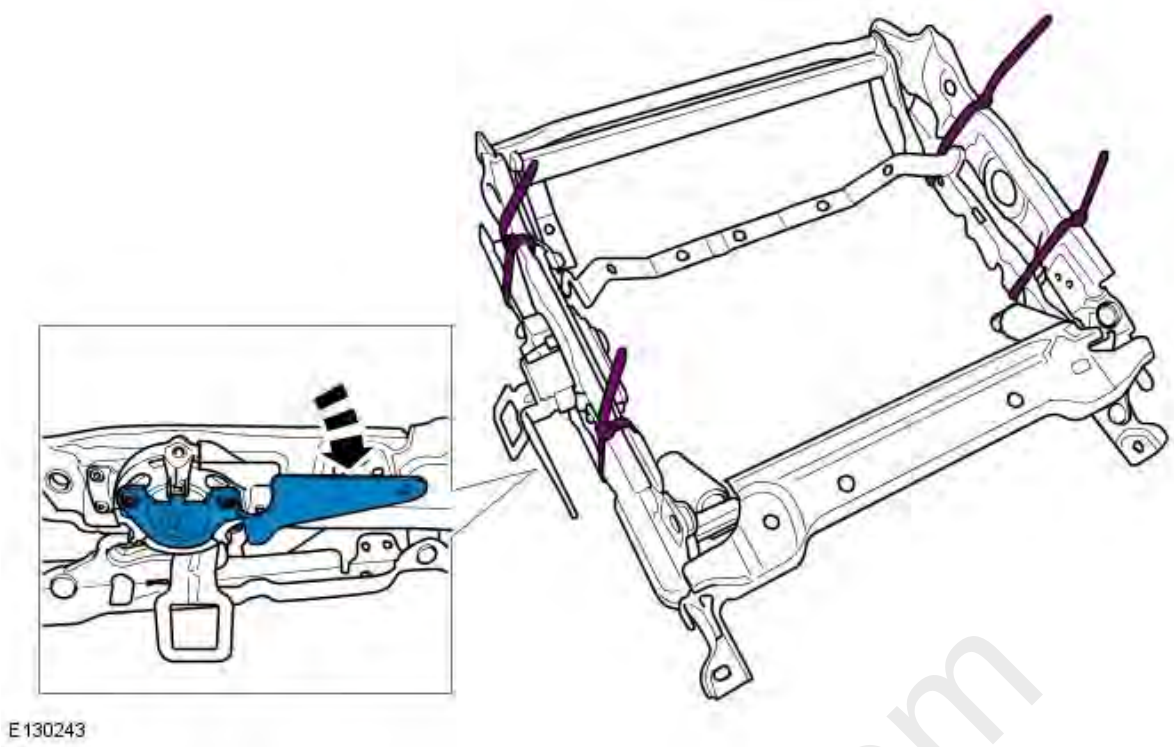

7. Release the arm from the height adjuster.

- Remove the Torx bolt.

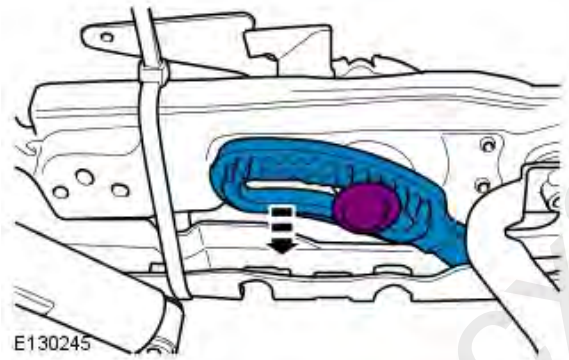

8. Drill out the 4 rivets.

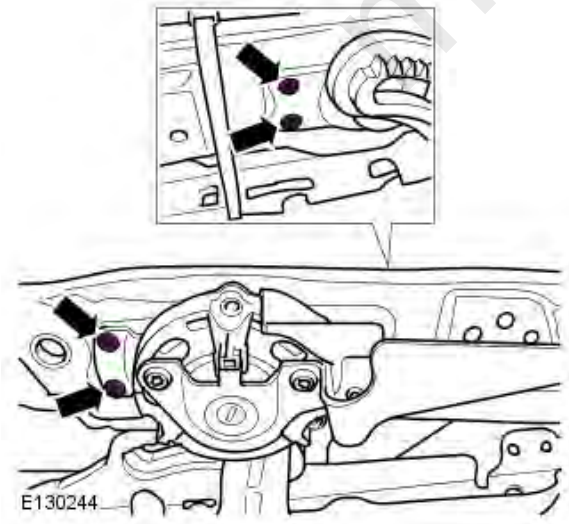

Installation

1. To install, reverse the removal procedure.

mox30.com